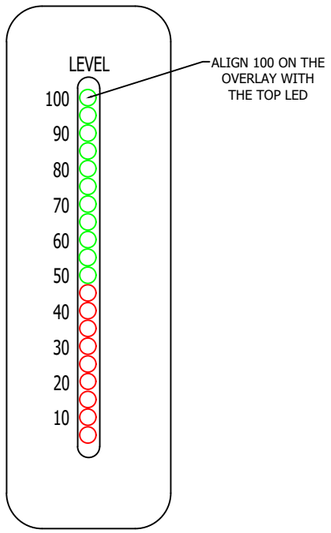

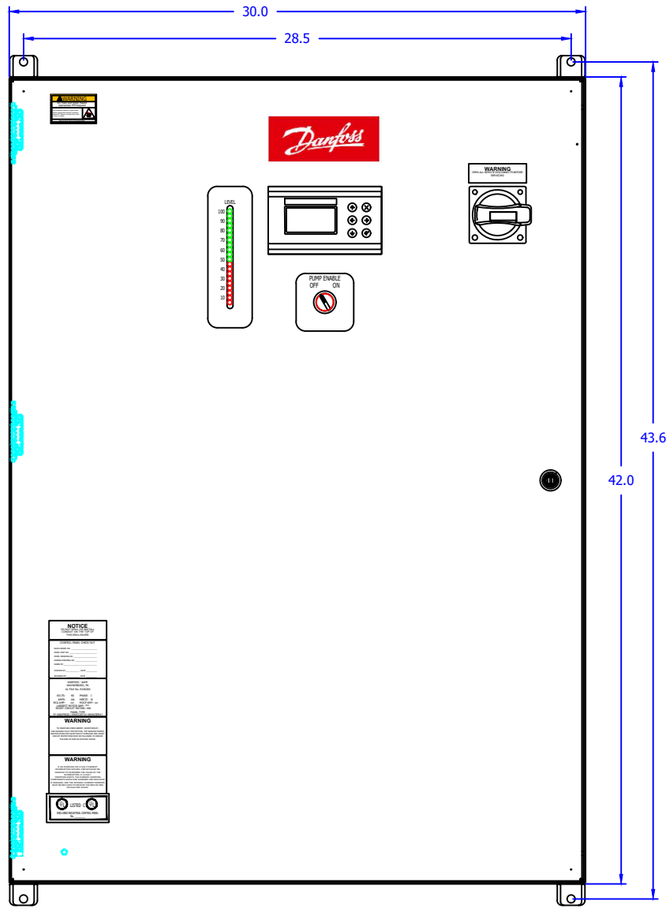

ENCLOSURE FRONT VIEW
42"(H) X 30"(W) X 10"(D)

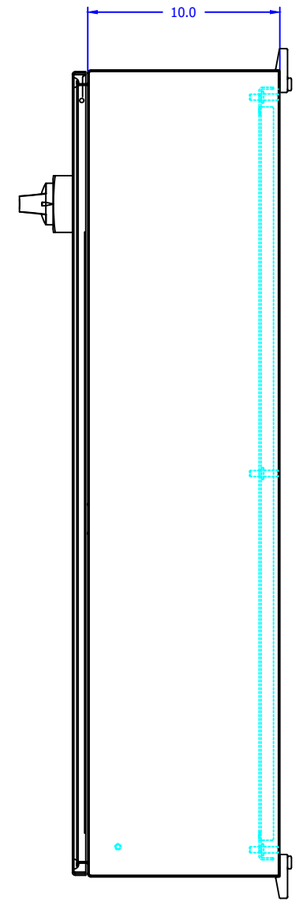

ENCLOSURE RIGHT SIDE VIEW

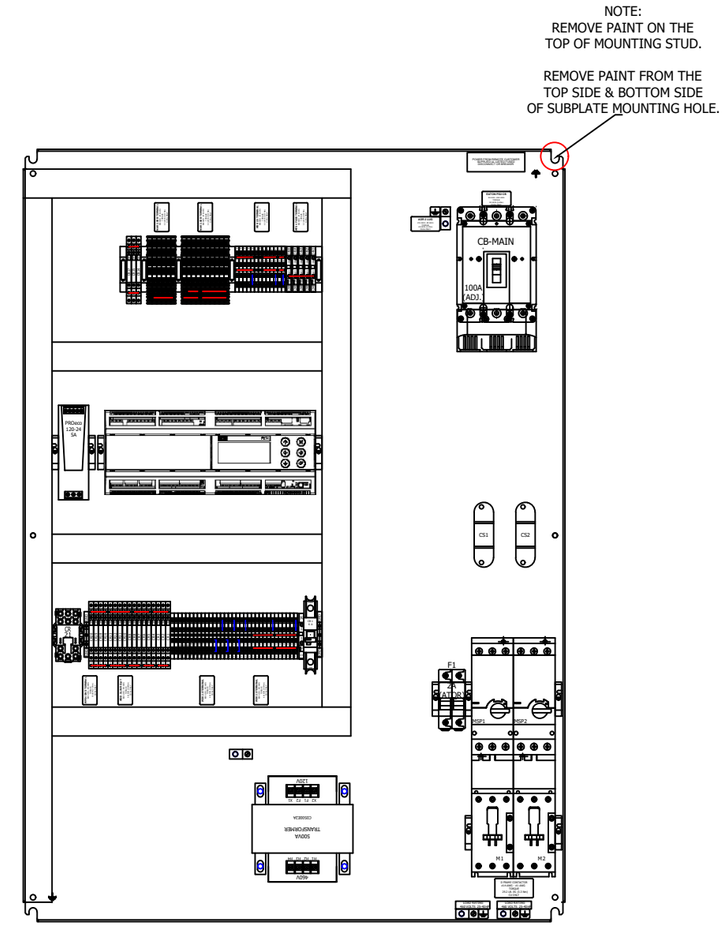

ENCLOSURE WITH SUBPLATE FRONT VIEW
SUBPLATE PAINTED WHITE

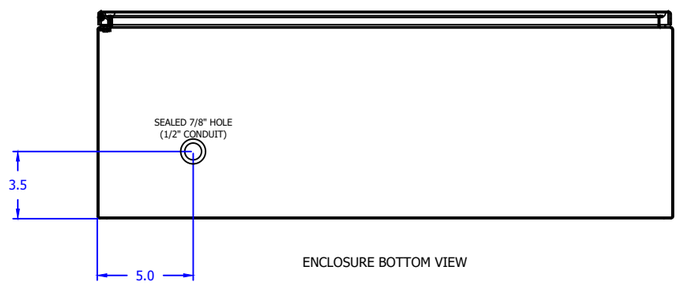

ENCLOSURE BOTTOM VIEW

TEMPERATURE RATING 32°F - 104°F	
TYPE 4 PAINTED GRAY	128F0219
TYPE 4X STAINLESS STEEL	-

REV	DESCRIPTION	DATE	DRAW	CHECK	APPROVE
	REVISIONS				

REV	DESCRIPTION	DATE	DRAW	CHECK	APPROVE
-	-	-	-	-	-
	REVISIONS				

Information on this drawing is not an indication of the material supplied. Refer to contract documents for details of material included..

This and all AAIM Controls drawings are the intellectual property of AAIM Controls and may not be copied in whole or part without prior approval of AAIM Controls, Inc.

AAIM controls A Danfoss Company
11885 Mutual Drive
Waynesboro, PA 17268

MCX 15B2 VESSEL CONTROL STARTER PANEL
TWO 30A TO 50A PUMPS
ENCLOSURE AND SUBPLATE LAYOUT

AAIM Order # -		Purchased by -	
Cust. PO # -		Purchased for -	
Cust. Ref # -		Address -	
Drawing by JRG	4/28/23	SIZE B	FSCM NO.
Checked Approved	4/28/23	DWG NO. 500-0239	REV -
JRR PEO		SCALE 1:8	SHEET 1 of 7

NOTES:

1. FIELD WIRING PER LOCAL CODES OR NEC/REGULATIONS.
2. USE BEST WIRING PRACTICE TO ENTER BOTTOM OR SIDES OF ENCLOSURE. AVOID ANY PENETRATIONS ON TOP OF ENCLOSURE. SEAL ANY ENTRANCES THAT MAY ALLOW FOR CONDENSING WATER WITHIN ENCLOSURE.
3. ALL INTENDED FIELD ADDITIONS & CONDUIT FITTINGS MUST BE OF THE SAME ENVIRONMENTAL TYPE AS ENCLOSURE TO MAINTAIN ENCLOSURE RATING.
4. ALL FIELD CONTROL WIRING TO BE #14AWG MINIMUM UNLESS OTHERWISE SPECIFIED BY LOCAL CODES.
5. FIELD INSTALLED CONDUCTORS SHOULD BE COPPER RATED 75°C MINIMUM UNLESS OTHERWISE DESIGNATED.
6. CONSULT MANUFACTURER'S WIRING RECOMMENDATION FOR TYPE, SIZE AND TERMINATION REQUIREMENT AS RELATED TO THE APPLICATION.
7. BEFORE DRILLING INTO PANEL, PROTECT ALL DEVICES INSIDE THE PANEL FROM METAL FILINGS.
8. BEFORE ENERGIZING PANEL CLEAN OUT ALL METAL FILINGS AND WIRE CLIPPINGS.
9. CHECK ALL TERMINALS FOR TIGHTNESS PRIOR TO ENERGIZING.
10. DISCONNECT MAIN POWER TO PANEL WHEN SERVICE IS REQUIRED.
11. DISCONNECT POWER BEFORE REMOVING ANY FUSE GUARDS. FUSE GUARDS MUST BE REINSTALLED BEFORE TURNING POWER BACK ON.
12. REPLACEMENT FUSES MUST BE OF THE SAME TYPE, SIZE, AMPERAGE AND VOLTAGE RATING.
13. MOTOR STARTER WIRING WILL VARY. REFER TO STARTER MANUFACTURER'S DIAGRAM FOR ACTUAL WIRING.
14. TO MAINTAIN OVERCURRENT, SHORT CIRCUIT, AND GROUND FAULT PROTECTION, THE MANUFACTURER'S INSTRUCTIONS FOR SELECTION OF OVERLOAD AND SHORT CIRCUIT PROTECTION MUST BE FOLLOWED TO REDUCE THE RISK OF FIRE AND ELECTRICAL SHOCK.
15. TRIPPING OF THE INSTANTANEOUS TRIP CIRCUIT BREAKER IS AN INDICATION THAT A FAULT CURRENT HAS BEEN INTERRUPTED.
16. CURRENT CARRYING COMPONENTS OF THE MAGNETIC MOTOR CONTROLLER SHOULD BE EXAMINED AND REPLACED IF DAMAGED TO REDUCE THE RISK OF FIRE AND ELECTRICAL SHOCK.
17. ALL GROUNDING/BONDING CONDUCTORS AND LUGS MUST TERMINATE ON BARE METAL AND NOT PAINTED SURFACES.

PART ID LEGEND:

1. CB = CIRCUIT BREAKER
2. F = 460VAC FUSE
3. FA = 24/120VAC FUSE
4. FD = 24VDC FUSE
5. MS = CONTACTOR
6. MSP = MANUAL MOTOR PROTECTOR
7. CR = CONTROL RELAY
8. OL = OVERLOAD
9. PS = POWER SUPPLY
10. VFD = VARIABLE FREQUENCY DRIVE
11. SS = SOFT STARTER
12. XFMR = TRANSFORMER
13. CS = CURRENT SENSOR
14. CT = CURRENT TRSNSFORMER
15. SW = SWITCH
16. PB = PUSH BUTTON
17. ES = E-STOP
18. DB = DISTRIBUTION BLOCK
19. TR = TIMER
20. HC = HEATER CONTACTOR
21. ESC = E-STOP CONTACTOR
22. DISC = ROTARY DISCONNECT
23. HT = HEAT TRACE CONTACTOR
24. AI = ANALOG INPUT
25. AO = ANALOG OUTPUT
26. DI = DIGITAL INPUT
27. DO = DIGITAL OUTPUT
28. N.O. = NORMALLY OPEN CONTACT
29. N.C. = NORMALLY CLOSE CONTACT
30. AUX = AUXILIARY CONTACT
31. JB = JUNCTION BOX
32. HOA = HAND/OFF/AUTO
33. GLP = GREEN LIGHT
34. RLP = RED LIGHT
35. WLP = WHITE LIGHT

WIRING LEGEND:

- PANEL FACTORY WIRING
- FIELD WIRING BY OTHERS
- NON-WIRE JUMPER
- (OTHER)

ALL INTERNAL CONTROL WIRING TO BE #16AWG UNLESS OTHERWISE SPECIFIED.

PANEL TERMINAL LEGEND:

- POWER PANEL CONTROL FIELD TERMINAL
- DEVICE I/O TERMINAL
- VFD TERMINAL
- PLC PANEL CONTROL FIELD TERMINAL
- JUNCTION BOX CONTROL FIELD TERMINAL
- JUNCTION POINT
- GROUNDING LUG/TERMINAL

WIRE COLOR LEGEND (TYPICAL):

1. (B) = BLACK WIRE - "460VAC POWER"
2. (G) = GREEN WIRE - "STANDARD GROUND"
3. (R) = RED WIRE - "24/120VAC HOT"
4. (W) = WHITE WIRE - "24/120VAC NEUTRAL"
5. (O) = ORANGE WIRE - "HOT FROM REMOTE SOURCE. **USE CAUTION!"**
6. (W/O) = WHITE W/ ORANGE STRIPE WIRE - "NEUTRAL FROM REMOTE SOURCE. **USE CAUTION!"**
7. (BLU) = BLUE WIRE - "+24VDC OR POSITIVE VOLTAGE"
8. (W/B) = WHITE W/ BLUE STRIPE WIRE- "VDC COMMON VOLTAGE"
9. (WHT) = WHITE WIRE - "ANALOG SIGNAL"
10. (BLK) = BLACK WIRE - "ANALOG COMMON"
11. (Y) = YELLOW WIRE - "HOT FROM A SECONDARY REMOTE SOURCE. **USE CAUTION!**"
12. (W/Y) = WHITE W/ YELLOW STRIPE WIRE - "NEUTRAL FROM A SECONDARY REMOTE SOURCE. **USE CAUTION!**"
13. (LBLU) = LIGHT BLUE WIRE - "CE VAC NEUTRAL"
14. (G/Y) = GREEN W/ YELLOW STRIPE WIRE - "CE GROUND"
15. (**) = BELDEN CABLE - "TWISTED 2 WIRE W/ SHIELD"
16. (***) = BELDEN CABLE - "TWISTED 3 WIRE W/ SHIELD"

REV	DESCRIPTION	DATE	DRAW	CHECK	APPROVE
-	-	-	-	-	-

REVISIONS

Information on this drawing is not an indication of the material supplied. Refer to contract documents for details of material included..

This and all AAIM Controls drawings are the intellectual property of AAIM Controls and may not be copied in whole or part without prior approval of AAIM Controls, Inc.

AAIM controls A Danfoss Company
11885 Mutual Drive
Waynesboro, PA 17268

MCX 15B2 VESSEL CONTROL STARTER PANEL
TWO 30A TO 50A PUMPS
INFORMATION PAGE

AAIM Order # -		Purchased by -	
Cust. PO # -		Purchased for -	
Cust. Ref # -		Address -	
Drawing by JRG	4/28/23	SIZE B	PSCM NO.
Checked Approved	4/28/23	SCALE 1:1	DWG NO. 500-0239
JRR PEO			REV -
			SHEET 2 of 7

FROM UL LISTED CIRCUIT BREAKER OR FUSED DISCONNECT
PROTECTED POWER SOURCE. 460VAC/60HZ/3PH, 65KAIC
UL=UP TO 66A, MCA= *, MOCP= *
*SEE BELOW CURRENT REQUIREMENT TABLE

IMPORTANT NOTE: PRIOR TO ENERGIZING, SET UL LISTED MAIN CIRCUIT BREAKER (CB-MAIN), CURRENT SENSORS (CS1 & CS2) AND MOTOR PROTECTORS (MSP1 & MSP2) TO THE CORRECT SETTING FOR THE PUMPS BEING USED FOR THE APPLICATION. SEE NOTE TABLES BELOW.

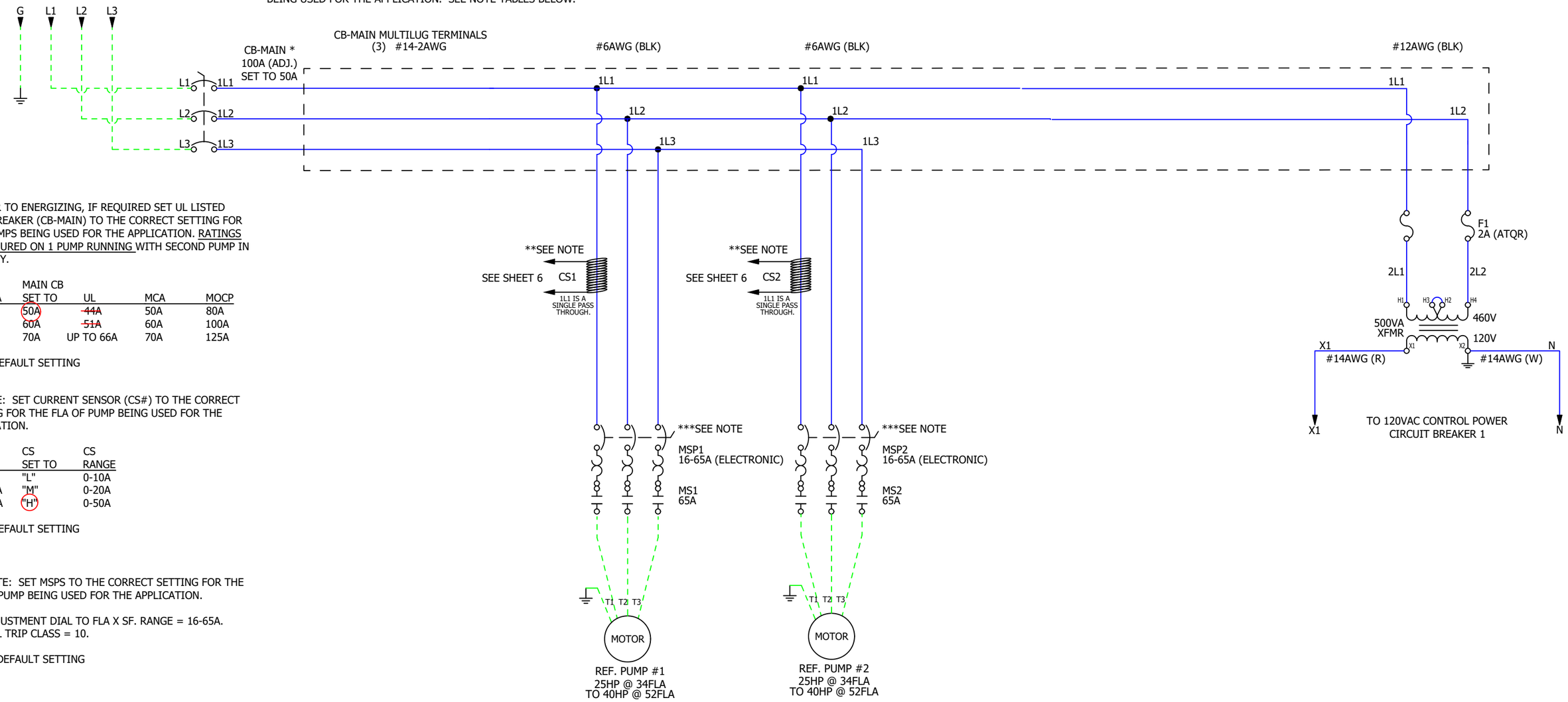

*PRIOR TO ENERGIZING, IF REQUIRED SET UL LISTED MAIN BREAKER (CB-MAIN) TO THE CORRECT SETTING FOR THE PUMPS BEING USED FOR THE APPLICATION. RATINGS ARE FIGURED ON 1 PUMP RUNNING WITH SECOND PUMP IN STANDBY.

PUMP HP / FLA	MAIN CB SET TO	UL	MCA	MOCP
25 / 34	50A	~~44A~~	50A	80A
30 / 40	60A	~~51A~~	60A	100A
40 / 52	70A	UP TO 66A	70A	125A

DEFAULT SETTING

** NOTE: SET CURRENT SENSOR (CS#) TO THE CORRECT SETTING FOR THE FLA OF PUMP BEING USED FOR THE APPLICATION.

PUMP FLA	CS SET TO	CS RANGE
0-10A	"L"	0-10A
10.1-20A	"M"	0-20A
20.1-50A	"H"	0-50A

DEFAULT SETTING

*** NOTE: SET MSPS TO THE CORRECT SETTING FOR THE FLA OF PUMP BEING USED FOR THE APPLICATION.

SET ADJUSTMENT DIAL TO FLA X SF. RANGE = 16-65A.
TYPICAL TRIP CLASS = 10.

34 DEFAULT SETTING

REV	DESCRIPTION	DATE	DRAW	CHECK	APPROVE
-	-	-	-	-	-

REVISIONS

Information on this drawing is not an indication of the material supplied. Refer to contract documents for details of material included..

This and all AAIM Controls drawings are the intellectual property of AAIM Controls and may not be copied in whole or part without prior approval of AAIM Controls, Inc.

AAIM controls A Danfoss Company
11885 Mutual Drive
Waynesboro, PA 17268

MCX 15B2 VESSEL CONTROL STARTER PANEL
TWO 30A TO 50A PUMPS
WIRING DIAGRAM

AAIM Order # -		Purchased by -	
Cust. PO # -		Purchased for -	
Cust. Ref # -		Address -	
Drawing by JRG	4/28/23	SIZE B	FSCM NO.
Checked JRR	Approved PEO	4/28/23	SCALE 1:1

DWG NO. 500-0239 REV -
SHEET 3 of 7

128F0219 / -
500-0239

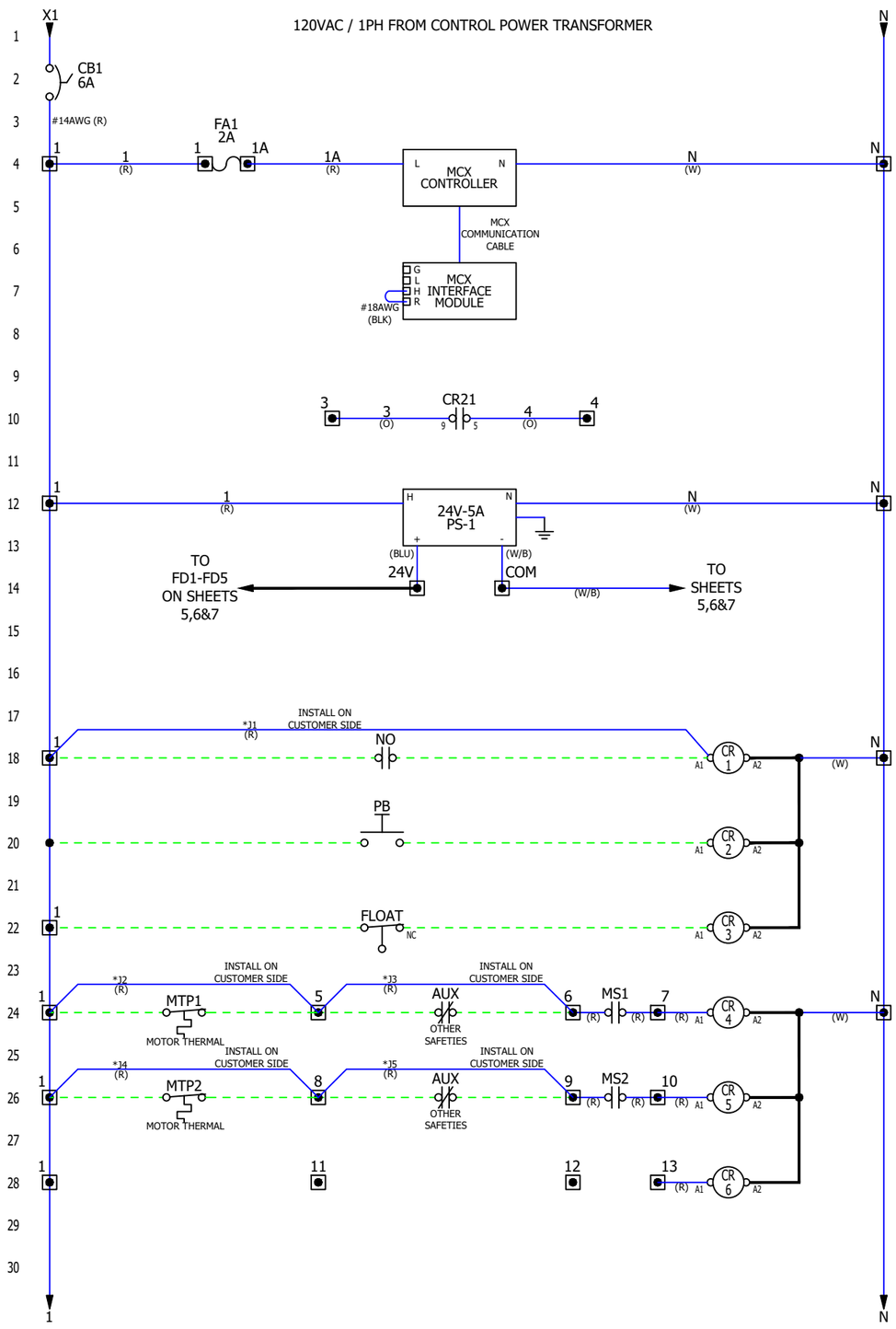

HIGH LEVEL SHUTDOWN
RELAY DRY CONTACT

CONTROLLER POWER SUPPLY
24VDC, 5A

REMOTE SYSTEM ENABLE
*REMOVE JUMPER IF USED
MAINTAINED ON FOR RUN
MODE (5-33)

REMOTE ALARM RESET
(IF APPLICABLE-MOMENTARY
ON FOR RESET)
(5-34)

VESSEL HIGH LEVEL
SHUTDOWN FLOAT SWITCH
(5-35)

PUMP #1 AUX
*REMOVE JUMPERS
IF APPLICABLE
(5-36)

PUMP #2 AUX
*REMOVE JUMPERS
IF APPLICABLE
(5-39)

PUMP #3 AUX
*REMOVE JUMPERS
IF APPLICABLE
(5-40)

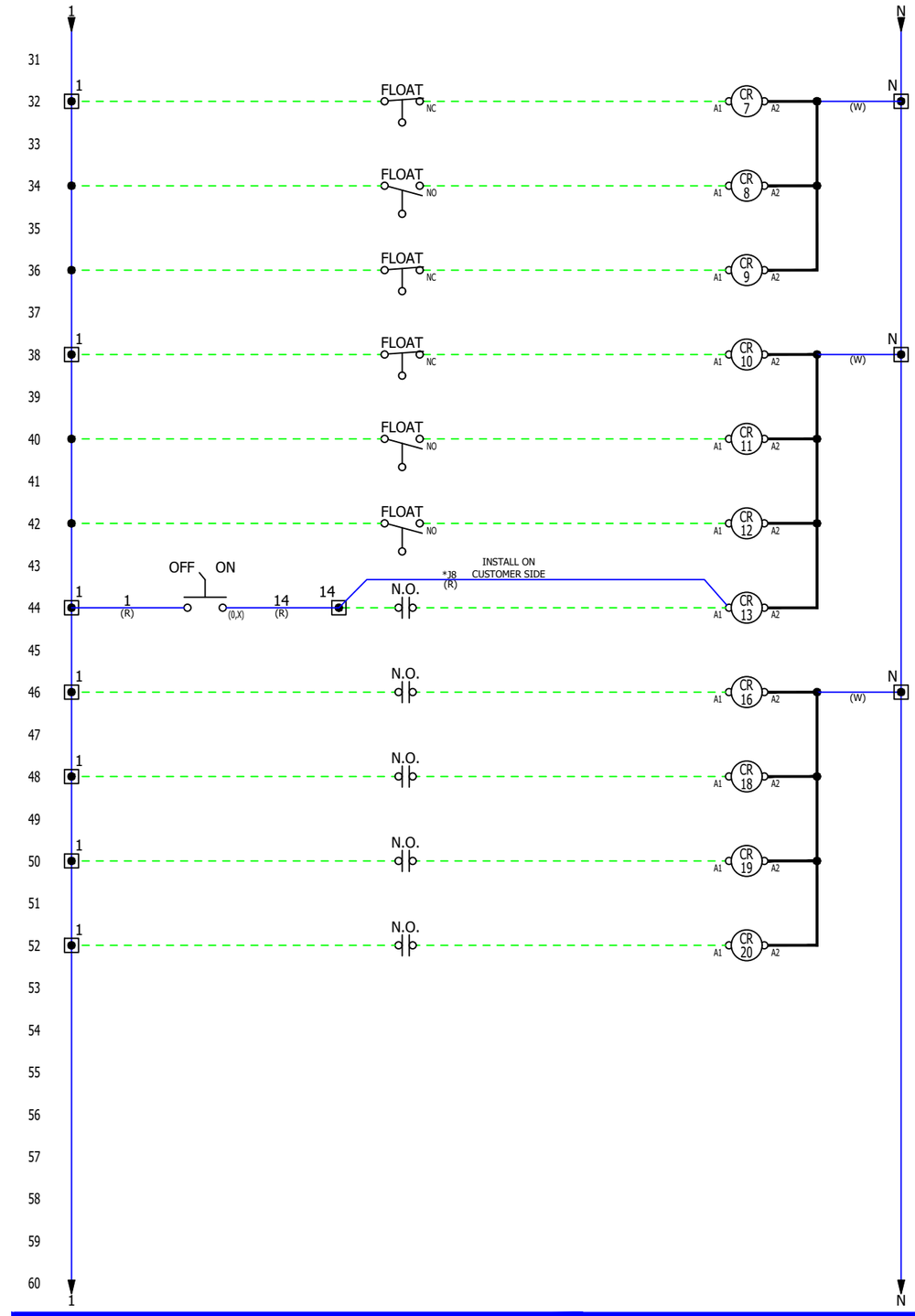

VESSEL HIGH LEVEL ALARM
FLOAT SWITCH
(5-41)

TRANSFER
FLOAT SWITCH
(5-42)

LIQUID FEED #1
FLOAT SWITCH
(5-44)

LIQUID FEED #2
FLOAT SWITCH
(5-45)

LOW LEVEL ALARM
FLOAT SWITCH
(5-46)

LOW LEVEL SHUTDOWN
FLOAT SWITCH
(5-47)

PUMPS RUN ENABLE
*REMOVE JUMPER IF USED
REMOTE ENABLE (5-48)

OIL RECTIFIER
(5-52)

GENERAL ALARM #1
*REMOVE JUMPER IF
APPLICABLE
(5-55)

GENERAL ALARM #2
*REMOVE JUMPER IF
APPLICABLE
(5-56)

GENERAL ALARM #3
*REMOVE JUMPER IF
APPLICABLE
(5-57)

REV	DESCRIPTION	DATE	DRAW	CHECK	APPROVE
-	-	-	-	-	-

REVISIONS

Information on this drawing is not an indication of the material supplied. Refer to contract documents for details of material included..

This and all AAIM Controls drawings are the intellectual property of AAIM Controls and may not be copied in whole or part without prior approval of AAIM Controls, Inc.

AAIM Controls A Danfoss Company
11885 Mutual Drive
Waynesboro, PA 17268

MCX 15B2 VESSEL CONTROL STARTER PANEL
TWO 30A TO 50A PUMPS
WIRING DIAGRAM

AAIM Order # -		Purchased by -	
Cust. PO # -		Purchased for -	
Cust. Ref # -		Address -	
Drawing by JRG	4/28/23	SIZE B	PSCM NO.
Checked JRR	Approved PEO	4/28/23	SCALE 1:1

DWG NO. 500-0239
REV -
SHEET 4 of 7

128F0219 / -
500-0239

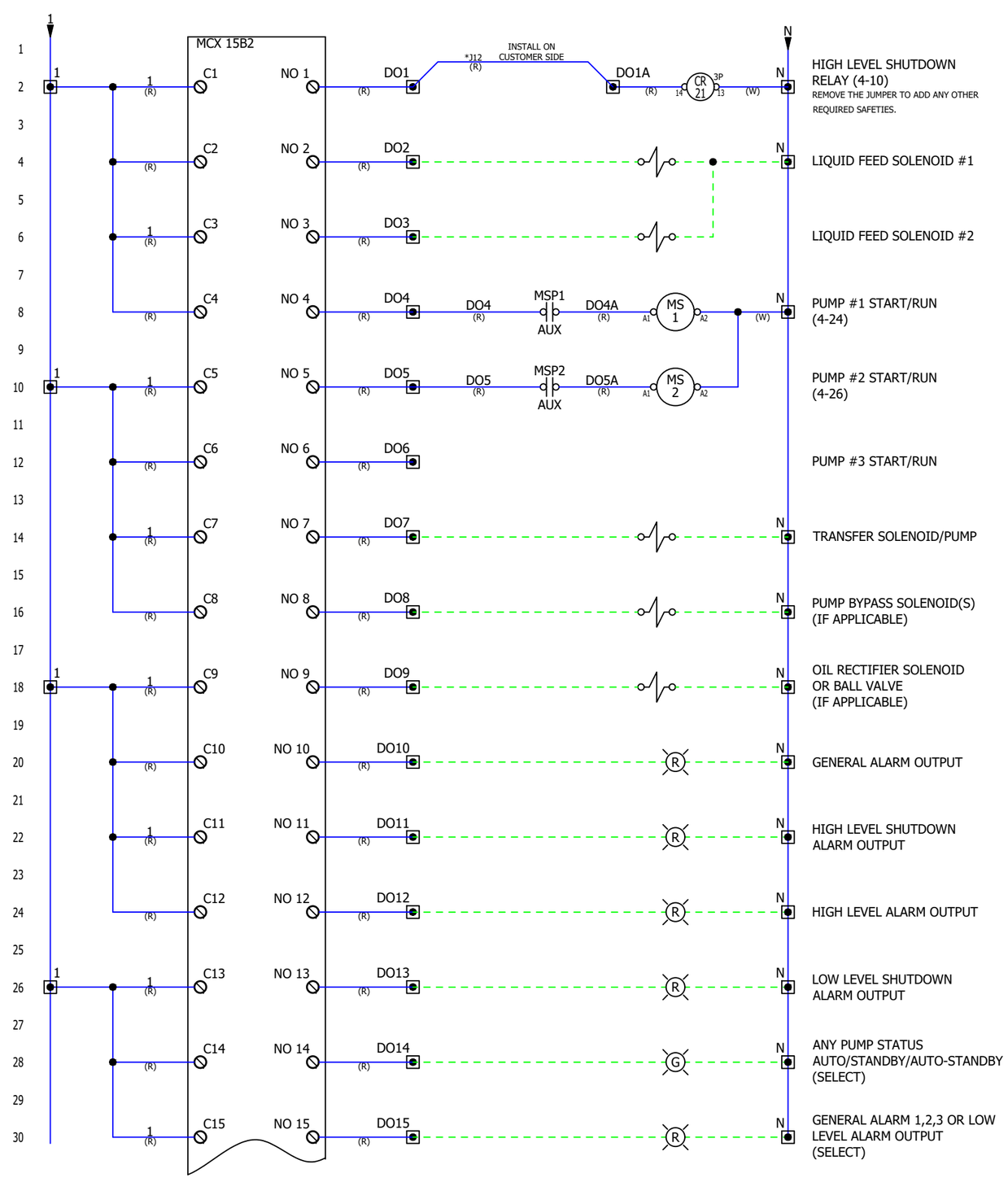

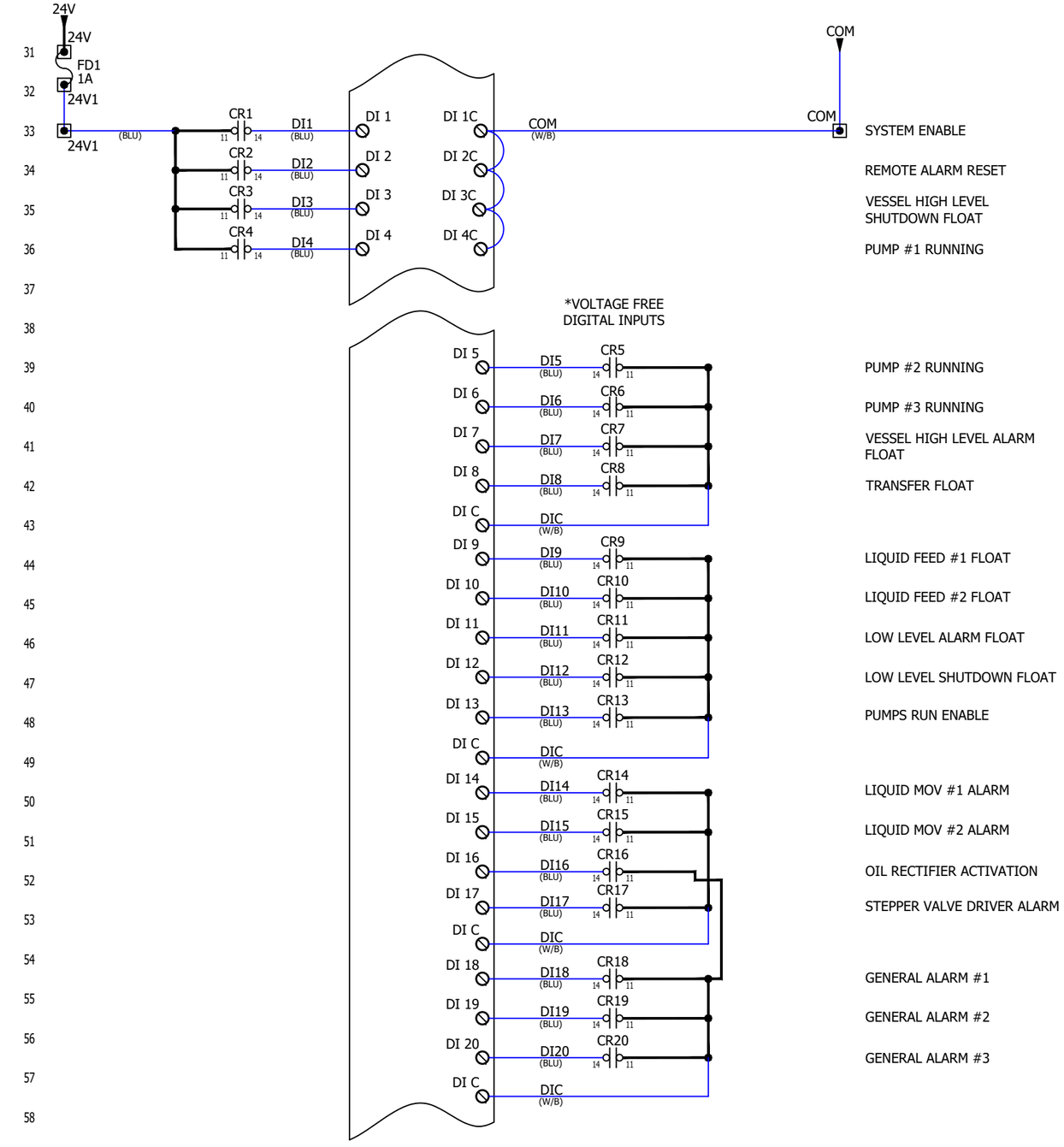

REV	DESCRIPTION	DATE	DRAW	CHECK	APPROVE
-	-	-	-	-	-

REVISIONS

REV	DESCRIPTION	DATE	DRAW	CHECK	APPROVE

REVISIONS

Information on this drawing is not an indication of the material supplied. Refer to contract documents for details of material included..

This and all AAIM Controls drawings are the intellectual property of AAIM Controls and may not be copied in whole or part without prior approval of AAIM Controls, Inc.

AAIM controls A Danfoss Company
11885 Mutual Drive
Waynesboro, PA 17268

MCX 15B2 VESSEL CONTROL STARTER PANEL
TWO 30A TO 50A PUMPS
WIRING DIAGRAM

AAIM Order # -		Purchased by -	
Cust. PO # -		Purchased for -	
Cust. Ref # -		Address -	
Drawing by JRG	4/28/23	SIZE B	FSCM NO.
Checked JRR	Approved PEO	4/28/23	SCALE 1:1

DWG NO. 500-0239 REV -

SHEET 5 of 7

128F0219 / - 500-0239

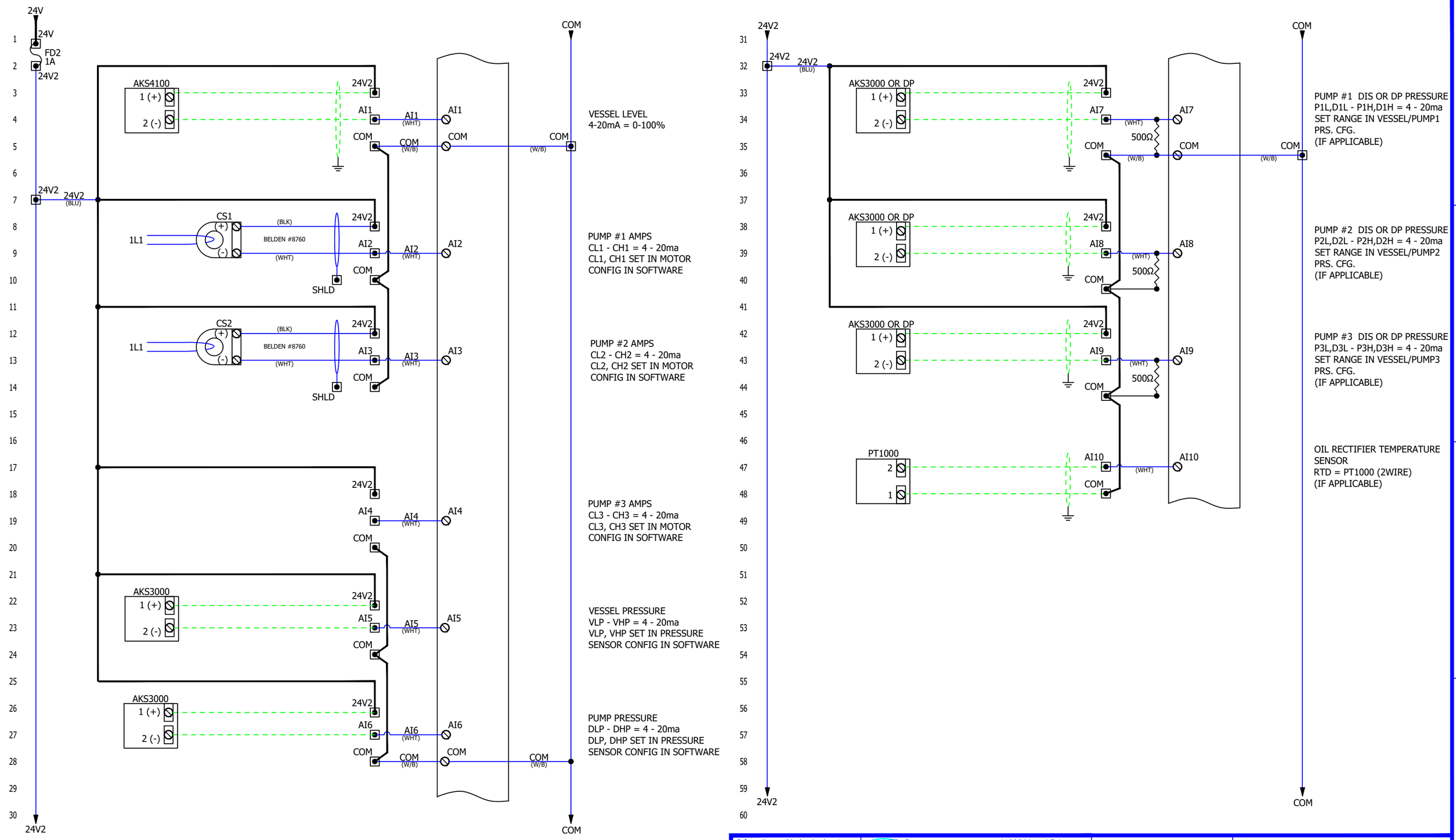

REV	DESCRIPTION	DATE	DRAW	CHECK	APPROVE
-	-	-	-	-	-

REVISIONS

Information on this drawing is not an indication of the material supplied. Refer to contract documents for details of material included..

This and all AAIM Controls drawings are the intellectual property of AAIM Controls and may not be copied in whole or part without prior approval of AAIM Controls, Inc.

AAIM Controls A Danfoss Company
11885 Mutual Drive
Waynesboro, PA 17268

MCX 15B2 VESSEL CONTROL STARTER PANEL
TWO 30A TO 50A PUMPS
WIRING DIAGRAM

AAIM Order # -		Purchased by -	
Cust. PO # -		Purchased for -	
Cust. Ref # -		Address -	
Drawing by JRG	4/28/23	SIZE B	FSCM NO.
Checked JRR	Approved PEO	4/28/23	SCALE 1:1

DWG NO. 500-0239 REV -

SHEET 6 of 7

128F0219 / - 500-0239

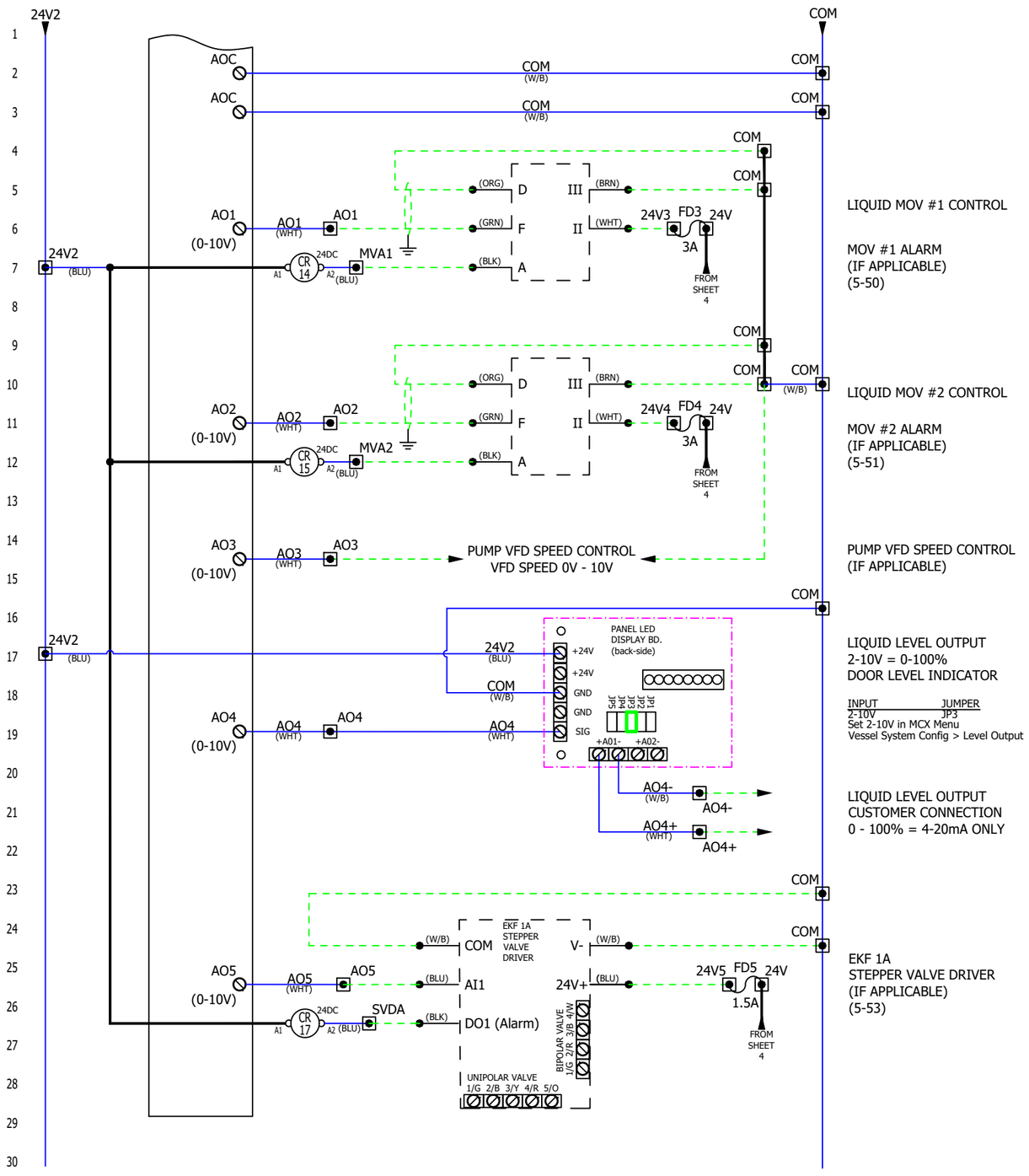

REV	DESCRIPTION	DATE	DRAW	CHECK	APPROVE
-	-	-	-	-	-

REVISIONS

Information on this drawing is not an indication of the material supplied. Refer to contract documents for details of material included..

This and all AAIM Controls drawings are the intellectual property of AAIM Controls and may not be copied in whole or part without prior approval of AAIM Controls, Inc.

AAIM controls A Danfoss Company
11885 Mutual Drive
Waynesboro, PA 17268

MCX 15B2 VESSEL CONTROL STARTER PANEL
TWO 30A TO 50A PUMPS
WIRING DIAGRAM

AAIM Order # -		Purchased by -	
Cust. PO # -		Purchased for -	
Cust. Ref # -		Address -	
Drawing by JRG	4/28/23	SIZE B	FSCM NO.
Checked JRR	Approved PEO	4/28/23	SCALE 1:1

DWG NO. 500-0239 REV -
SHEET 7 of 7

128F0219 / -
500-0239

MCX15B2 Vessel Liquid Level Control Panel

User Guide

Contents

Product Introduction 3
Ordering 3
Specifications 4
Approvals 4
Installation 5
Network Topology 5
I/O Descriptions 8
Operation 11
- Level Control 11
- Pump Control 15

Pump Cavitation/Speed Control/Run Hrs 17
Status Screens 18
Setting or Viewing Parameters 21
BIOS and Application upgrade 22
Web Interface 22
Modbus TCP 23
Backup/Restore Parameters 23
Parameter Table 23
Panel Terminal Block I/O Points 35
Panel Layout Drawing 36
Panel Electrical Drawing 37

© Danfoss

Product Introduction

The MCX-Vessel Liquid Level controller is a complete solution for controlling the liquid level in a horizonal or vertical vessel recirculatory refrigeration system. It is easy to setup and use. The LCD display and simple keypad combine to provide an easy to navigate, operator friendly interface for set point and calibration entry.

Some of the Standard features include:

- Selection of either *level probe* (LP) or *float-switch* (FS) mode to measure liquid level
- Motorized valves with proportional/integral (PI) for liquid level control
- Option to use multiple pump pressure sensors
- Option to use Delta pressure sensors for both vessel and pump pressures
- Automatic pump control with Smart Mode option
- Motor protection
- Modbus RTU and Modbus TCP/IP communications
- Real-time clock
- Pump runtime hours with Pump runtime equalization
- Web server
- Update software and save parameters with a USB stick
- Integrated Superheat controller for possible oil rectification

There are two basic control functions that need to be performed for proper operation, liquid level control and pump control. This user guide will describe in detail the operation of the MCX Liquid Level Controller.

Ordering

Type	Function	Application	Code no.
Type 4 Gray	Stand-alone Vessel Liquid Level Controller – No Starters	Weather tight Indoor/Outdoor	128F0234
Type 4 Gray	Vessel Liquid Level Controller – 2 Pumps, ≤5hp 460V ATL	Weather tight Indoor/Outdoor	128F0235
Type 4 Gray	Vessel Liquid Level Controller – 2 Pumps, 7hp – 20hp 460V ATL	Weather tight Indoor/Outdoor	128F0237
Type 4 Gray	Vessel Liquid Level Controller – 2 Pumps, 25hp – 40hp 460V ATL	Weather tight Indoor/Outdoor	128F0239

© Danfoss

Specifications

Model
MCX15B2

Part Number
080G0328

Supply Voltage
21 – 265VAC 50/60 Hz
40 – 230VDC
Maximum power consumption: 15 W
20 VA insulation between power supply and the extra-low voltage: functional

Modbus
It is important that the installation of the data communication cable be installed correctly. Remember to terminate each end of the bus. EIA485 Rated cable must be used.
See separate literature No. RC8AC902.

DO - Digital outputs, 15
DO1 – D013 SPST relay 5A
DO9 - Unused
DO14, DO15 Unused

AO - Analog output, 6
AO1 – AO4 Outputs are 0 – 10 VDC
AO5 – AO6 Unused

AI - Analog Inputs, 10
AI1 – AI6 Inputs are 4-20mA
AI7 – AI10 Unused

DI - Digital inputs, 22
DI1 - DI4 24/230VAC opto-insulated
DI5 – DI15 Voltage free/24Vac sensing
D16 – DI22 Unused

Operating conditions
CE: -20T60 / UL: 0T55, 90% RH non-condensing

Approvals

EU Declaration of Conformity
This product is in conformity with the following directive(s), standard(s) or other normative
document(s), provided that the product is used in accordance with our instructions.

EMC directive 2014/30/EU

By fulfilling the requirements in the following standards
EN 61000-6-3: 2007 +A1: 2011 (Emission standard for residential, commercial and light-industrial environments)
EN 61000-6-2: 2005 Generic standards. Immunity for industrial environments

LVD directive 2014/35/EU

By fulfilling the requirements in the following standards
EN60730-1: 2011 Automatic electrical controls for household and similar use. General requirements
EN60730-2-9: 2010 Particular Requirements for Temperature Sensing Controls

RoHS Directive 2011/65/EU and 2015/863/EU

By fulfilling the requirements in the following standards EN 50581:2012

UL Approval UL file: E31024

Network Topology

The network cable, for Modbus RTU communications, should be EIA485 rated. The cable is connected from controller to controller, and no branches (stars) are allowed on the cable. If the cable length exceeds 1200 meters (1312 yards) a repeater must be inserted. One repeater must be added for every 32 controllers. If the data communication cable runs through an electrically noisy environment which impairs the data signal, one or more repeaters must be added to stabilize the signal. When configuring Modbus devices on the control bus, the highest device address that can be used is 120 (max 120 Modbus control devices in total). The wires are looped from device to device and must observe polarity. A is connected to A and B is connected to B. The shield must be connected and complete a path from the device, all controllers, and any repeaters. The shield must not be connected to earth ground.

The MCX-Liquid Level Controller default baud rate is 19.2K.

© Danfoss

I/O Descriptions

D I/O	DESCRIPTION	TYPE
DO 1	High Level Shutdown Alarm	OUTPUT
DO 2	Liquid Feed Solenoid Valve #1	OUTPUT
DO 3	Liquid Feed Solenoid Valve #2	OUTPUT
DO 4	Pump #1 Start	OUTPUT
DO 5	Pump #2 Start	OUTPUT
DO 6	Pump #3 Start	OUTPUT
DO 7	Transfer Pump Solenoid Valve	OUTPUT
DO 8	Pump Bypass Solenoid Valve	OUTPUT
DO 9	Superheat Oil Rectifier - Solenoid Valve	OUTPUT
DO 10	General Alarm	OUTPUT
DO 11	Shutdown Alarm	OUTPUT
DO 12	High Level Alarm	OUTPUT
DO 13	Low Level Shutdown Alarm	OUTPUT
DO 14	Pump Mode – Evaporator Injection Signal	OUTPUT
DO 15	General Alarm 1,2, 3 or Low Level Alarm (select)	OUTPUT
DI 1	System Remote Enable/Disable	INPUT
DI 2	Remote Reset	INPUT
DI 3	Float Switch – High Level Shutdown Alarm (HLSD)	INPUT
DI 4	Pump #1 Aux Run Contacts	INPUT
DI 5	Pump #2 Aux Run Contacts	INPUT
DI 6	Pump #3 Aux Run Contacts	INPUT
DI 7	Float Switch – High Level Alarm	INPUT
DI 8	Float Switch – Transfer Solenoid	INPUT
DI 9	Float Switch – Liquid Feed Solenoid Valve #1	INPUT
DI 10	Float Switch – Liquid Feed Solenoid Valve #2	INPUT
DI 11	Float Switch – Low Level Alarm	INPUT
DI 12	Float Switch – Low Level Shutdown Alarm (LLSD)	INPUT
DI 13	Pumps Enable/Disable	INPUT
DI 14	Liquid Motorized Valve #1 Alarm	INPUT
DI 15	Liquid Motorized Valve #2 Alarm	INPUT
DI 16	Superheat Oil Rectifier Activation	INPUT
DI 17	Stepper Valve Driver Alarm	INPUT
DI 18	General Alarm 1	INPUT
DI 19	General Alarm 2	INPUT
DI 20	General Alarm 3	INPUT

OUTPUTS:

High Level Shutdown Alarm – DO 1 – Output is de-energized when the liquid level in the vessel rises to the "High level Shutdown Setpoint LP" SP3 set Control parameters or if employing a High level shutdown float switch, when the input is de-energized. Output is energized when liquid level falls below the setpoint or if float switch is energized. A "High Level Shutdown" alarm must be operator reset. Output is re-energized when liquid level falls below HLSD SP (high level shutdown setpoint) and the alarm is cleared using DI 2 Remote Reset or in Main Menu "Alarms → Reset".

Liquid Feed Solenoid Valve #1 – DO 2 – Controls the liquid feed makeup to the vessel. If a motorized liquid makeup valve is not installed, then the solenoid output is energized when the vessel liquid level is below set point, and de-energized when the vessel liquid level is at or above set point. If a motorized liquid makeup valve is installed, the solenoid is in-line with the motorized liquid makeup valve. The solenoid is open when vessel level is below, equal to or above set point, to allow the motorized valve to control the level. If the vessel level rises a percent above set point (parameter - Liquid Feed SV1 OFF Diff SP LP), the solenoid will be de-energized. If a float switch "FS Liquid Feed Solenoid #1" is employed and energized, the output is energized.

Liquid Feed Solenoid Valve #2 – DO 3 – Employed when one liquid feed system is not enough to keep up with demand. Controls the liquid feed makeup to the vessel. If a motorized liquid makeup valve is not installed, then the solenoid output

is energized when the vessel liquid level is below set point, and de-energized when the vessel liquid level is at or above set point. If a motorized liquid makeup valve is installed, the solenoid is in-line with the motorized liquid makeup valve. The solenoid is open when vessel level is below, equal to or above set point, to allow the motorized valve to control the level. If the vessel level rises a percent above set point (parameter - Liquid Feed SV2 OFF Diff SP LP), the solenoid will be de-energized. If a float switch (FS) "Liquid Feed Solenoid #2" is employed and energized, the output is energized.

Pump #1 Start – DO 4 – (as configured) When pump #1 is requested to start in either Auto or Manual mode, the output is energized. When pump #1 is requested to stop this output is de-energized.

Pump #2 Start – DO 5 – (as configured) When pump #2 is requested to start in either Auto or Manual mode, the output is energized. When pump #2 is requested to stop this output is de-energized.

Pump #3 Start – DO 6 – (as configured) When pump #3 is requested to start in either Auto or Manual mode, the output is energized. When pump #3 is requested to stop this output is de-energized.

Transfer Pump Or Solenoid – DO 7 – This output is energized when liquid level in the vessel reaches the "Transfer Solenoid SP LP" setpoint and in the Level Control parameters group or if employing a Transfer float switch, when the corresponding input (DI 8) is energized. Output is de-energized when liquid level falls below the setpoint or if float switch input is de-energized.

Pump Bypass Solenoid – DO 8 – The Pump Bypass Solenoid output is energized when any pump output is energized.

SH Oil Rectifier Solenoid – DO 9 – The Oil Rectifier Solenoid output is energized when any pump is running and DI16 (Oil rectifier Activation) is energized. It is de-energized when either all the pumps are stopped or when DI16 is de-energized.

General Alarm – DO 10 – Output is energized on any alarm. Output is de-energized when all active alarms are remedied and reset either remotely or locally.

Shutdown Alarm – DO 11 – Output is energized on any Shutdown event. Shutdown events include High Level Shutdown, Low Level Shutdown, Pump Aux Fault and Pump High Amps Fault. Output is de-energized only after a manual reset is performed, either remotely or locally.

High Level Alarm – DO 12 – Output is energized when the liquid level in the vessel reaches either the "High level Alarm Setpoint LP" set in the Level Control parameters or if employing a High level alarm float switch, when it is de-energized. Output is de-energized automatically when liquid level drops below setpoint or float switch is energized.

Low Level Shutdown Alarm – DO 13 – Output is energized when the liquid level in the vessel drops below either the "Low level Shutdown Setpoint LP" set in the Level Control parameters or if employing a Low level shutdown float switch, when the input (DI12) is de-energized. The Output is de-energized when liquid level rises above the setpoint in parameter SP8 or if employing a LLSD float switch, when the delay time set in parameter SP7 expires.

Pump Mode – Evaporator Injection Signal– DO 14 – Output is energized when any pump is "running/Auto", "Standby" mode, or both. Select output in parameter label "PDO" in MAIN MENU > Parameters > Pump Control Main > Pump mode Select DO14.

General Alarm 1,2, 3 or Low Level Alarm (select) - DO 15 – Output is energized when one of the selected General Alarm digital inputs is energized due to an external alarm condition. See parameter SCA. Main Menu > Service > General > Configuration > General Alarm Select to select condition for DO15 output.

INPUTS:

System Remote Enable/Disable – DI 1 – This input must be energized to remote enable the pumps and the liquid feed solenoid valves. If remote enable is not used, a jumper wire will be required from a 24Vdc source.

Remote Reset – DI 2 – Alarms may be remotely reset via this input. The remote reset is accomplished energizing this input momentary.

Float Switch – High Level Shutdown Alarm- DI 3 – (as configured; Default=YES) The vessel high-level shutdown alarm float switch input is energized ON during normal operation. If the liquid level rises in the vessel to the high-level shutdown switch, the input is de-energized and issues a "High Level Shutdown Alarm". The pumps will continue to run to reduce the liquid in the vessel. Alarm causes solenoid liquid feed make-up valves SV1 and SV2 to fully close.

Pump #1 Aux Run Contacts – DI 4 – This input must be energized for Pump #1 to run. Normally wired through an auxiliary contact on the motor starter. If at any time it drops out or is de-energized, a "Pump #1 Aux Fault" alarm will be issued after "Delay Time Aux Alarm" and the pump will be shutdown.

***NOTE: Digital Inputs DI 5 to DI 15 are voltage free (VF), therefore when DI C is connected to input, input is energized.**

Pump #2 Aux Run Contacts – DI 5 (VF)– This input must be energized for Pump #2 to run. Normally wired through an auxiliary contact on the motor starter. If at any time it drops out or is de-energized, a "Pump #2 Aux Fault" alarm will be after "Delay Time Aux Alarm" and the pump will be shutdown.

Pump #3 Aux Run Contacts – DI 6 (VF)– This input must be energized for Pump #3 to run. Normally wired through an auxiliary contact on the motor starter. If at any time it drops out or is de-energized, a "Pump #3 Aux Fault" alarm will be after "Delay Time Aux Alarm" and the pump will be shutdown.

Float Switch – High Level Alarm – DI 7(VF) – (as configured) The vessel high level alarm float switch input is energized during normal operation. If the liquid level rises in the vessel to the high-level switch, the input is de-energized and issues a "High Level Alarm". The pumps will continue to run to reduce the liquid in the vessel. If not currently closed, the liquid solenoid make-up valves SV1 and SV2 will be closed.

Float Switch – Transfer Solenoid – DI 8 (VF)– (as configured) The vessel transfer solenoid switch is de-energized during normal operation. If the liquid level rises in the vessel to the transfer solenoid switch, the input is energized, and the transfer solenoid output will be energized.

Float Switch – Liquid Feed Solenoid #1 – DI 9 (VF) – The liquid feed solenoid #1 switch input is de-energized when the liquid level is at operational level. If the liquid level in the vessel falls below the liquid feed solenoid #1 float switch, the input is energized, and the Liquid feed solenoid #1 output is energized.

Float Switch – Liquid Feed Solenoid #2 – DI 10 (VF) – The liquid feed solenoid #2 switch input is de-energized when the liquid level is at operational level. If the liquid level in the vessel falls below the liquid feed solenoid #2 float switch, the input is energized, and the Liquid feed solenoid #2 output is energized.

Float Switch – Low Level Alarm – DI 11 (VF)– (as configured) The vessel Low-level alarm float switch input is energized during normal operation. If the liquid level in the vessel falls below Low-level alarm float switch, the input is de-energized and issues a "Low Level Alarm" and DO15 is energized if parameter SCA in Main menu > Service>General>Configuration is set to "Low Level Alarm. In addition, the alarm can be set to "No Display" in parameter LLN, but output will still be enabled.

Float Switch – Low Level Shutdown Alarm – DI 12 (VF) – (as configured) The vessel Low-level shutdown alarm float switch input is energized during normal operation. If the liquid level in the vessel falls below Low-level shutdown alarm float switch, the input is de-energized and issues a "Low Level Shutdown Alarm". The pumps will be held "OFF" during the time when the LLSD alarm is active. The LLSD alarm will clear automatically and the pumps will turn back "ON" when both the liquid level rises above LLSD float switch level and the delay time set in parameter SP7 expires.
NOTE: As safety precaution in FS mode only, if time is set to high in parameter SP7, the alarm will clear and the pumps will turn back "ON" when the liquid level rises sufficiently enough to de-energize liquid feed solenoid #1 Input and close SV1.

Pumps Enable/Disable – DI 13 (VF)– Normally used for an evaporator request for liquid, this remote input must be energized for the pumps to run. If this input is de-energized, the pumps will be held in an "OFF" state but still in AUTO mode. The input is voltage free for the energized state. Therefore when DI C (com) is connected to this input it is energized.

Liquid MOV #1 Alarm – DI 14 (VF)– Input alarming from an ICAD motorized valve. Input is de-energized during normal operation or when there is no alarm. When input is energized an alarm will be displayed ⚠ and appear in active alarms as "ICAD MV1 Alarm". The alarm is auto-resetting and will clear when input is de-energized.

Liquid MOV #2 Alarm – DI 15 (VF)– Input alarming from an ICAD motorized valve. Input is de-energized during normal operation or when there is no alarm. When input is energized an alarm will be displayed ⚠ and appear in active alarms as "ICAD MV2 Alarm". The alarm is auto-resetting and will clear when input is de-energized.
SH Oil Rectifier Activation – DI 16 (VF)– Remote input activates the Oil Rectifier Function. If remote control is not utilized, a jumper must be used to activate.

Stepper Valve Driver Alarm – DI 17 (VF)– Input alarming from stepper valve driver alarm. Normally energized. When input is de-energized an alarm will be displayed ⚠ and appear in active alarms as *"Stepper Valve Driver Alarm"*. The alarm is auto-resetting and will clear when input is re-energized. Stepper Valve Driver Alarm is associated with a Modbus address for remote monitoring.
General Alarm 1 – DI 18 (VF)– Input alarming from remote source. Normally energized (selectable). When input is de-energized (default) an alarm will be displayed ⚠ and appear in active alarms as *"General Alarm 1"*. The alarm is auto-resetting and will clear when input is re-energized. General Alarm input 1 is associated with a Modbus address for remote monitoring and can be selected for a activating DO 15. See parameter SCA.

General Alarm 2 – DI 19 (VF)– Input alarming from remote source. Normally energized (selectable). When input is de-energized (default) an alarm will be displayed ⚠ and appear in active alarms as *"General Alarm 2"*. The alarm is auto-resetting and will clear when input is re-energized. General Alarm input 2 is associated with a Modbus address for remote monitoring and can be selected for a activating DO 15. See parameter SCA.

General Alarm 3 – DI 20 (VF)– Input alarming from remote source. Normally energized (selectable). When input is de-energized (default) an alarm will be displayed ⚠ and appear in active alarms as *"General Alarm 3"*. The alarm is auto-resetting and will clear when input is re-energized. General Alarm input 3 is associated with a Modbus address for remote monitoring and can be selected for a activating DO 15. See parameter SCA.

ANALOG

A I/O	DESCRIPTION	SIGNAL	TYPE
AO 1	Liquid Feed Motorized Valve #1 or Pump Speed 3	0-10V	OUTPUT
AO 2	Liquid Feed Motorized Valve #2 or Pump Speed 2	0-10V	OUTPUT
AO 3	Pump Speed 1 or All Pumps Speed **	0-10V	OUTPUT
AO 4	Liquid Level Output	0-10V	OUTPUT
AO 5	Oil Rectifier Stepper Valve Driver EKF or ICM	0-10V	OUTPUT
AI 1	Vessel Liquid Level Probe	4-20 mA	INPUT
AI 2	Pump Motor #1 Amps	4-20 mA	INPUT
AI 3	Pump Motor #2 Amps	4-20 mA	INPUT
AI 4	Pump Motor #3 Amps	4-20 mA	INPUT
AI 5	Vessel Pressure	4-20 mA	INPUT
AI 6	Pump Discharge Pressure	4-20 mA	INPUT
AI 7	Pump Motor #1 Discharge or Delta Pressure	*4-20mA	INPUT
AI 8	Pump Motor #2 Discharge or Delta Pressure	*4-20mA	INPUT
AI 9	Pump Motor #3 Discharge or Delta Pressure	*4-20mA	INPUT
AI 10	Oil Rectifier SH S2 Temp C	PT1000	INPUT

*MCX is set for 0-10V input but conditioned externally to accept a 4-20mA input. Pressure sensor output must be 4-20mA
** Based on parameter selection

OUTPUTS:

Liquid Feed Motorized Valve #1 – AO 1– This 0-10V output is connected to motorized liquid feed valve MV1. The liquid feed valve is open and closed proportionally to the vessel liquid level.
The 0-10V output can also be used to control VFD#3 speed (percent or differential pressure) associated with pump#3. Requires setting Main Valve configuration parameter to either VCF = 1SV , VCF = 2SV or VCF = None

Liquid Feed Motorized Valve #2 – AO 2– The second motorized feed valve is used when one motorized feed valve is not large enough to supply liquid to large vessels. This 0-10V output is connected to motorized liquid feed valve MV2. The liquid feed valve is open and closed proportionally to the vessel liquid level.
The 0-10V output can also be used to control the VFD#2 speed (percent or differential pressure) associated with pump#2. Requires setting Main Valve configuration parameter to either VCF = 1SV , VCF = 2SV or VCF = None

Pump(s) Speed 1 or All Pumps Speed – AO 3 – This is a dedicated 0-10V output used to control Pump#1 speed (percent or differential pressure). It may also control all the pumps speed if using one VFD for all the pumps.

Liquid Level – AO 4 – Outputs a 0-10V or 2-10V signal proportional to the liquid level in the vessel.

Oil Rectifier Stepper Driver EKF – AO 5 – Outputs a 0-10V signal to the EKF Stepper Motor Driver Module to control an ETS Valve.

INPUTS:

Vessel Liquid Level Probe – AI 1 – The probe measures the liquid ammonia refrigerant level in the vessel. This liquid level input controls the "Liquid Feed Solenoid valves SV1 & SV2" and "Liquid Feed Motorized valves MV1 & MV2". The liquid level probe outputs 4-20 mA over the liquid level range of 0-100%.

Pump Motor #1 Amps – AI 2 – Current transformer (CT) input senses pump #1 motor current and outputs a linear 4-20mA signal across its range.

Pump Motor #2 Amps – AI 3 – Current transformer (CT) input senses pump #2 motor current and outputs a linear 4-20mA signal across its range.

Pump Motor #3 Amps – AI 4 – Current transformer (CT) input senses pump #3 motor current and outputs a linear 4-20mA signal across its range.

Vessel Pressure – AI 5 – Sensor measures the vessel pressure and outputs a 4-20mA linear signal across its range to this input. If employing, configure vessel pressure sensor ranges in MCX Parameters > Vessel/Pump Prs Main
NOTE: Sensor is not required if employing a delta pressure sensor that outputs a 4-20mA differential.

Pump Discharge Pressure or Delta Pressure – AI 6 – This is the default system pressure configuration when employing only one pump discharge pressure sensor. The sensor measures the discharge pressure and outputs a 4-20mA linear signal across its range to this input. Configure sensor ranges in MCX Parameters > Vessel/Pump Prs Main. A single delta pressure sensor that measures both the vessel pressure and pumps discharge pressure and outputs a 4-20mA differential pressure signal may also be used on this input. Configure in MCX Parameters > Vessel System Config > System Pressure Configuration > 1- DP Transmitter. Set sensor ranges in MCX Parameters > Vessel/Pump Prs Main

Pump Motor #1 Discharge or Delta Pressure – AI 7 – Use this input if employing more than one pump discharge pressure sensor. For this input, the sensor measures pump #1 discharge pressure and outputs a 4-20mA linear signal across its range to this input. A delta pressure sensor that measures both the vessel pressure and pump #1 discharge pressure and outputs a 4-20mA differential pressure may also be used on this input. If using as delta input, AI 8 (vessel and pump #2 discharge pressure) must be configured to use a delta sensor also. Configure in MCX Parameters > Vessel System Config > System Pressure Configuration > 2- DP Transmitter. If employing, configure sensor range in MCX Parameters > Vessel/Pump 1 Prs Cfg

Pump Motor #2 Discharge or Delta Pressure – AI 8 – Use this input if employing two pump discharge pressure sensors. For this input, the sensor measures pump #2 discharge pressure and outputs a 4-20mA linear signal across its range to this input. A delta pressure sensor that measures both the vessel pressure and pump #2 discharge pressure that outputs a 4-20mA differential pressure may also be used on this input. If using as delta input, AI 7 (vessel and pump #1 discharge pressure) must be configured to be used as a delta sensor also. Configure in MCX Parameters > Vessel System Config > System Pressure Configuration > 2- DP Transmitter. If employing, configure sensor range in MCX Parameters > Vessel/Pump 2 Prs Cfg

Pump Motor #3 Discharge or Delta Pressure – AI 9 – Use this input if employing a discharge pressure sensor on each pump. For this input, the sensor measures pump #3 discharge pressure and outputs a 4-20mA linear signal across its range to this input. A delta pressure sensor that measures both the vessel pressure and pump #3 discharge pressure and outputs a 4-20mA differential pressure may also be used on this input. If using as delta input, AI 7 and AI 8 must also be configured to use

a delta sensor. Configure in MCX Parameters > Vessel System Config > System Pressure Configuration > 3- DP Transmitter. If employing, configure sensor range in MCX Parameters > Vessel/Pump 3 Prs Cfg

Oil Rectifier SH S2 Temp – AI 10 – PT1000 RTD Input. Measures the temperature at the outlet of the heat exchanger. Used to calculate the Superheat temperature.

Operation

LEVEL CONTROL - Solenoid Valves

The diagram below shows a vessel with liquid in it. A level probe reads the level and transmits the signal to the controller. The controller determines the level in comparison to the desired Liquid Level setpoint, and if lower than setpoint - dead band %, output energizes the liquid fee solenoid until the liquid level reaches the setpoint + Off Diff SP at which point the liquid solenoid is turned off.

The signal from the level probe may require calibration so that the indicated level is the same as the actual liquid level. In the Main menu – Input/Output - I/O Config menu, the operator can calibrate the input with a (+/-) offset variable to correct the level input signal. The level value is then displayed on the operator interface and is also made available at AO4 (4-20mA) and additionally transmitted through the serial communication port.

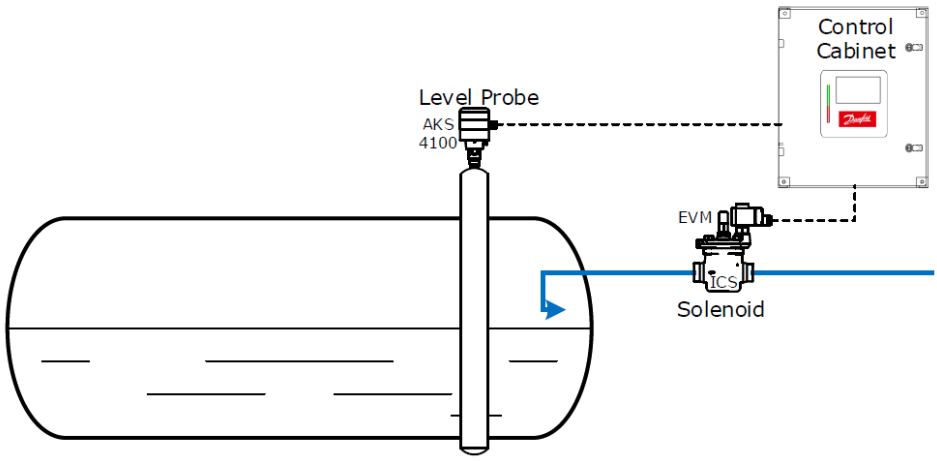

The analog value is read from the level probe and compared to the setpoint entered by the operator. If the level is at setpoint or higher, the output remains off and the solenoid is closed. If the level drops below "Level Control Setpoint 1 LP" - "Liquid Feed SV1 ON DIFF SP LP" set in parameters, the output is turned on and the solenoid is opens. The output remains open until the level reached is at "Level Control Setpoint 1 LP" + "Liquid Feed SV1 Off Diff SP LP".

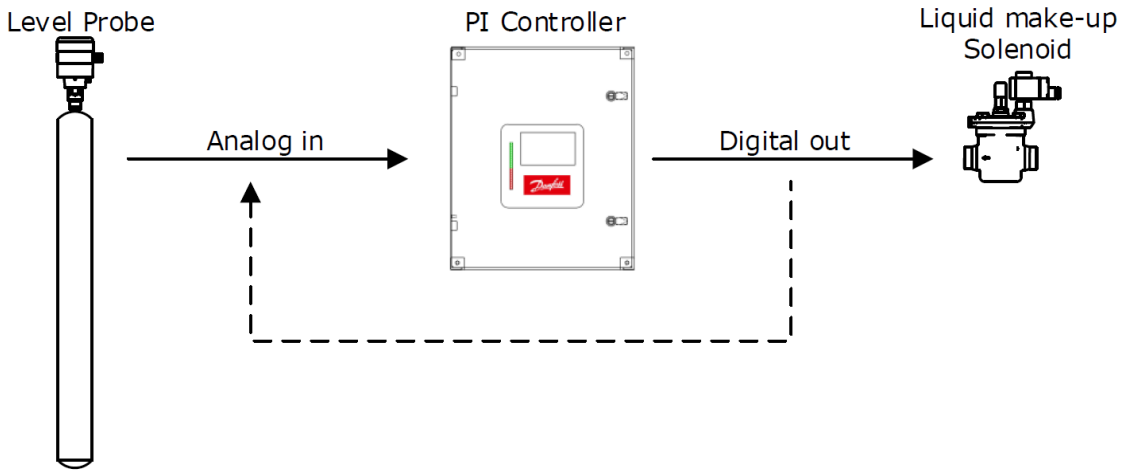

Dual liquid make-up solenoids can be employed to optimize for full load and part load conditions. The two solenoids can be the same size or one larger than the other. The software would be configured so that the solenoids would be energized in a two-stage configuration. As an example, if level setpoint 1 is at 50%, solenoid valve1 would open when the level drops to 45% with "Liquid Feed SV1 ON DIFF SP LP" set to 5%, and solenoid 2, with a setpoint at 40% and "Liquid Feed SV2 ON DIFF SP LP" setpoint at 2%, would open when the level dropped to 38%. At this point, both solenoids are open and feeding liquid to the vessel.

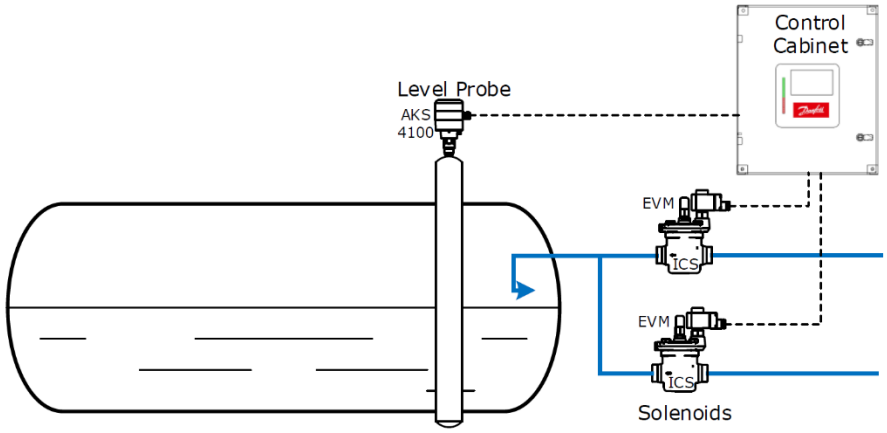

LEVEL CONTROL - Motorized Valves

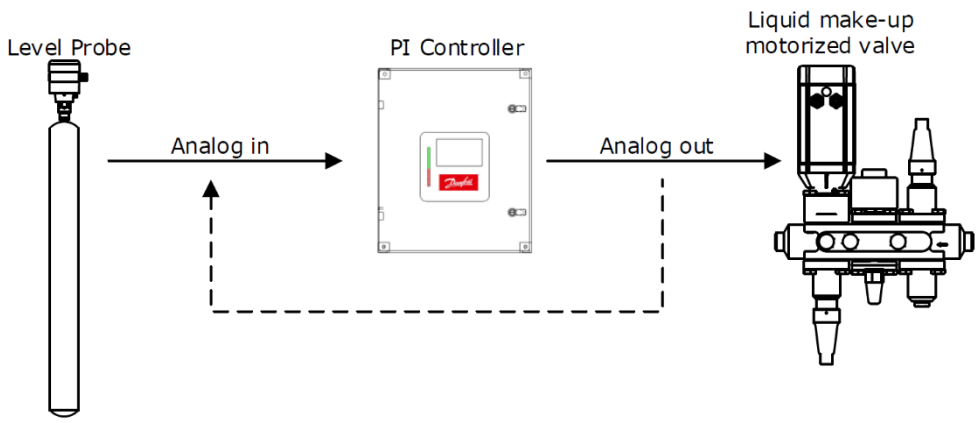

Variable motorized valves can be substituted for the liquid make-up solenoid valves. The variable motor valve has the advantage of feeding liquid at full flow or part load. Motorized valves eliminate the liquid hammer effect from solenoids. True PI (Proportional; Integral) control can be used with the motorized valve. Motorized valves also make use of a dead band where no PI regulation will occur. In addition, the microprocessor controller outputs a 0-10V signal to drive the valve.

A solenoid should be included with the motorized valve. The reason for the solenoid is that it acts as a back-up safety device in case the motorized valve sticks open or fails operate.

For an example during a power failure which may allow liquid to continue to flow into the vessel and possibly over filling it.

The solenoid assures liquid shut-off. The controller will close the solenoid when the liquid level reaches the values set in "Level Control Setpoint 1 LP" + "Liquid Feed SV1 Off Diff SP LP" parameters, regardless of the motorized valve position.

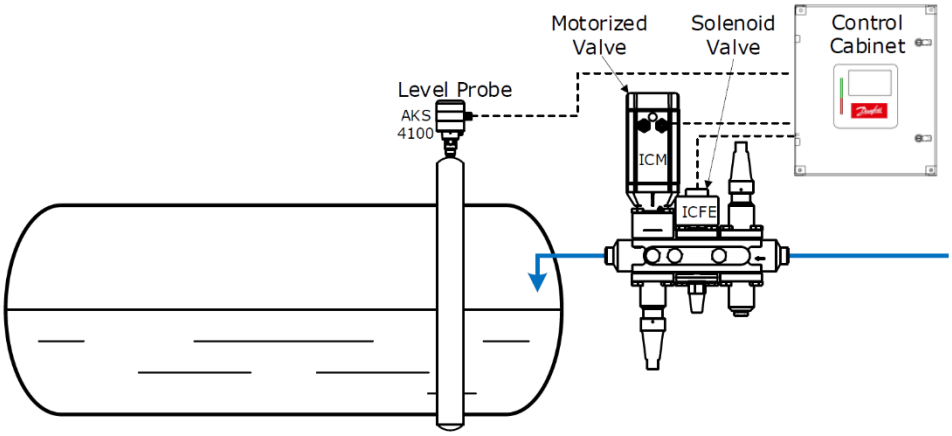

Two motorized valves can be employed and set up as a two-stage system.
Motorized valve 1 will open proportionally according to level setpoint #1 and motorized valve number two will open proportionally to according level setpoint #2. Operation is similar to the previous example above for the solenoid valve#1, except that solenoid valve #2 will close the when the level reaches the "Level Control Setpoint 2 LP" + "Liquid Feed SV2 OFF DIFF SP LP" setpoint, regardless of the motorized valve position.

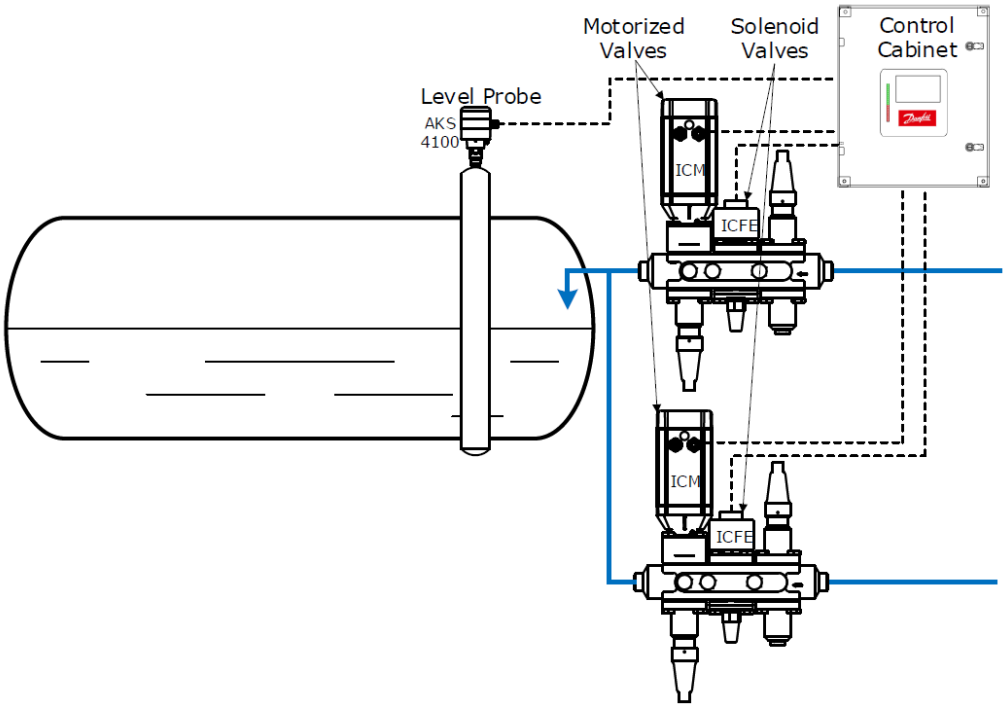

Note: Except for Liquid Feed transfer float switches, any mechanical alarm floats can be configured to be used with the Level Probe and motorized valves.

LEVEL CONTROL – Float Switches

In some situations, the controller will be fitted to older systems that may not be able to have an analog level probe sensor fitted to it. In that case, the existing float switches will need to be utilized to measure the level in the vessel. Single or dual liquid feed solenoid valves can be employed with this configuration, but variable motorized valves cannot be used.

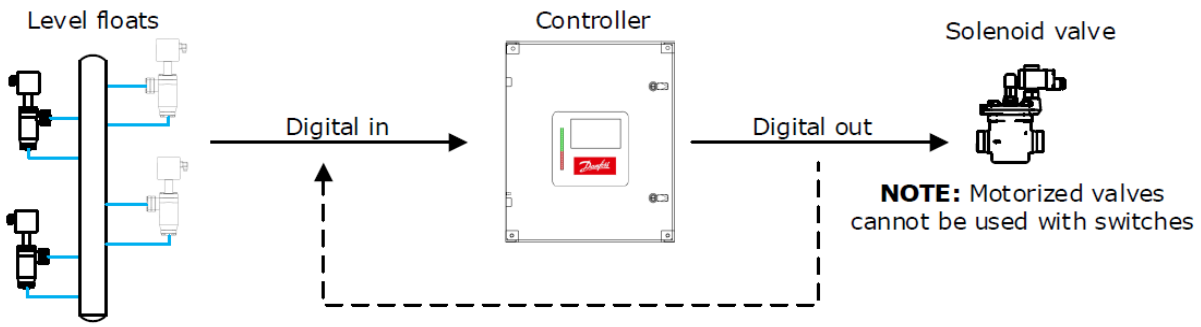

The mechanical floats or level switches are in fixed positions and cannot be moved, therefore, the level control setpoints are fixed. The controller accepts up to seven level floats as input devices. In a normal four float configuration as shown above, the two middle floats control the two liquid feed valves. The top float is the high-level shutdown float. The bottom is the low-level pump shutdown float. If more than four floats are employed, options are configurable for a Low-Level Alarm float switch, High-Level Alarm float switch and a Transfer float switch.

When the liquid level drops the Liquid Feed float switch closes and the input to the microprocessor is energized which in turn energizes a liquid feed solenoid after a set delay (Liquid Feed SV1 ON Delay FS; Liquid Feed SV2 ON Delay FS) to effectively prevent solenoid chatter. When the level rises and the float switch contacts open, the input to the microprocessor is de-energized and the liquid feed solenoid valve closes after a set time delay. The delay shutting off the solenoid helps prevent solenoid chatter. Delay is set in "Liquid Feed SV1 OFF Delay FS" and "Liquid Feed SV2 OFF Delay FS".

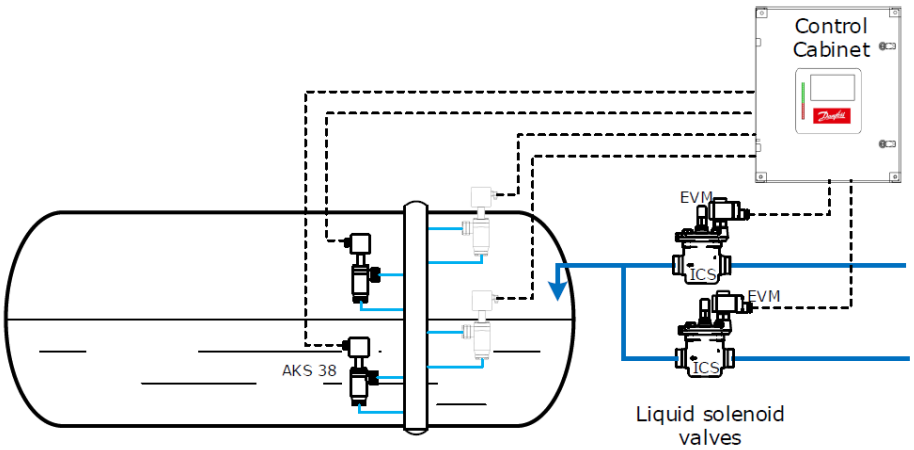

FLOAT LEVEL DISPLAY

If employing floats, the Liquid Level can be displayed on the MAIN screen by configuring each float for a particular percentage level in the Main Menu. When a particular float input becomes energized or de-energized the value will reflect the level set in parameters HSP (HLSD), HAP (HLA), S1P (SV1), S2P (SV1), LAP (LLA) and LSP (LLSD).

For example, if employing HLSD, SV1, SV2, and LLSD floats, ensure each float is enabled and the floats not being used are disabled in Parameters > Vessel System Config. Each float is then set a percent value in Parameters > Vessel System Config. Example: Enabled float switches, HLSD = 100, SV1 = 60, SV2 = 40, LLSD = 10. If HLSD is energized (no alarm), SV1 is energized, SV2 is de-energized and LLSD is energized then the display will look similar to this:

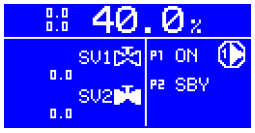

An energized SV2 drops the level displayed to the value set on LLSD, which in this case is 10%.

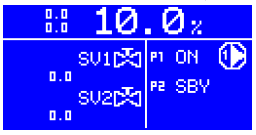

A de-energized LLSD drops the level displayed to 0%.

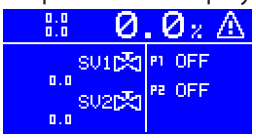

PUMP CONTROL

The diagram below shows a refrigerant pump with:

- Pump run contacts
- Pump motor current
- Pump discharge pressure sensor

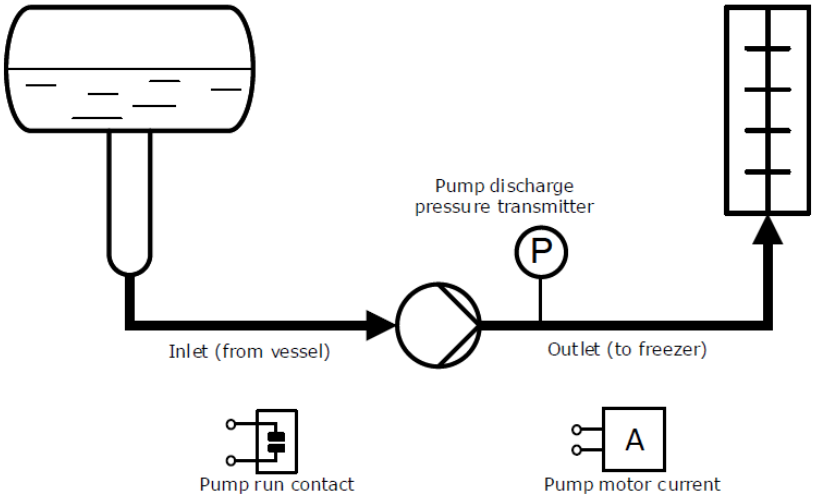

The operator can manually place the pumps in the following modes if Pump Smart Mode Auto Config is set to "OFF" :

- Auto
- Standby
- OFF
- Manual/Hand (ON)

TWO PUMP OPERATION

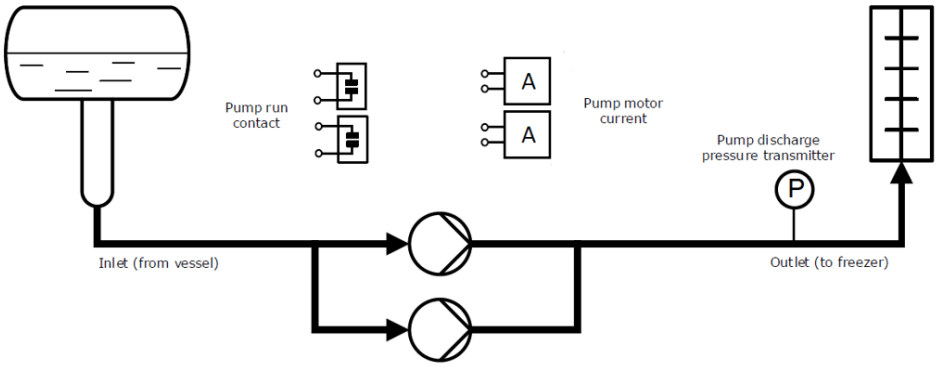

In a typical two pump operation, one pump will run, and one will be in the stand-by mode. The operator can select which pump will run and which pump will be in the stand-by mode. The operator can also select that there is no standby pump by placing the second pump in "OFF" mode.

The pump(s) are energized when the PEN "Pumps Enable" input is energized. The "Pumps Enable" or PEN input must be energized for the pumps to run. If the Pumps Enable input is off or de-energized, the pumps will be "held OFF" but will stay be in AUTO mode.
Once the pump output is energized, the software will look for verification that the pump is running by confirming after a certain amount of time, that the pump auxiliary run contacts are closed. If the Aux run contacts do not close, the pump output is turned off and a "Pump Aux Alarm" is generated. If configured, the software will look at pump motor current and verifies that the motor current is above the minimum motor current set-point. If current is below after a time delay, the pump is shut down and a "Low Amps Shutdown Alarm" is generated. By default, the CT inputs
for the pumps are disabled. CT's must be individually enabled in software for use and CT ranges set appropriately.

If the pump fails due to cavitation, low or high motor amps, or aux fault, the stand-by or lag pump will be automatically started after the lead pump is shutdown. An alarm will issued due to the failure of the lead pump. If the standby pump also fails, the system is in shutdown mode and requires operator intervention.

If there is a "High Level Alarm" or "High Level Shutdown" the pumps will continue to operate.

If there is a "Low Level Shutdown Alarm (LLSD)" the pumps will stop, and the pump status will be indicated as "OFF". Once the vessel level is above the "Low Level Alarm Shutdown" set-point in LP mode, the pumps will re-start according to level setpoint in parameter SP8 and the time delay set in parameter ALS. If the system is configured in FS (Float Switch) mode, the pumps will re-start when LLSD input is energized, after time delay set in ALS, and after the pump delay set in parameter SP7.

Other options are available for using different combinations or types of vessel and pump discharge pressure sensors.
In Parameters > Vessel System Config > System Pressure Configuration, there are six different configurations to choose from.

- 1 – DischargePS; This is the default configuration using one vessel pressure sensor (AI 5) and one pump discharge pressure sensor (AI 6) for a two or three pump system.
- 2 – DischargePS; Two pump system. One vessel pressure sensor (AI 5) and one pump discharge pressure sensor for each pump (AI 7) and (AI 8).
- 3 – DischargePS; Three pump system. One vessel pressure sensor (AI 5) and one discharge pressure sensor for each of the three pumps on (AI 7), (AI 8) and (AI 9).
- 1 – DP Transmitter; Two pump system using a one delta/differential pressure sensor. Does not require a vessel pressure sensor. Both the vessel and pump discharge pressure lines are connected to the sensor. The sensor outputs a linear 4-20mA differential signal to the input of (AI 6)
- 2 – DP Transmitter; Two pump system using two delta/differential pressure sensors. Does not require a vessel pressure sensor. The vessel and the pump discharge pressure lines are connected to each delta sensor. The sensor outputs a linear 4-20mA differential signal to the inputs of (AI 7) and (AI 8)
- 3 – DP Transmitter; Three pump system using three delta/differential pressure sensors. Does not require a vessel pressure sensor. The vessel and the pump discharge pressure lines are connected to each delta sensor. The sensor outputs a linear 4-20mA differential signal to the inputs of (AI 7), (AI 8) and (AI 9).

THREE PUMP OPERATION

The operation of a three-pump system is similar to a two-pump system. Two pumps run with the third in standby mode.
In the case of a three-pump system, one pump could fail on motor current while the other pump is OK. In this case, the offending pump will be shutdown, an alarm issued, and the standby or lag pump will be started. If both lead pumps fail due to motor current, the standby pump is started, and an alarm is issued.

If the pumps fail due to cavitation the stand-by pump will be automatically started after the two pumps are shutdown andan alarm issued due to the failure of the lead pumps. If the standby pump also fails, the system is in a shutdown mode and requires operator intervention.

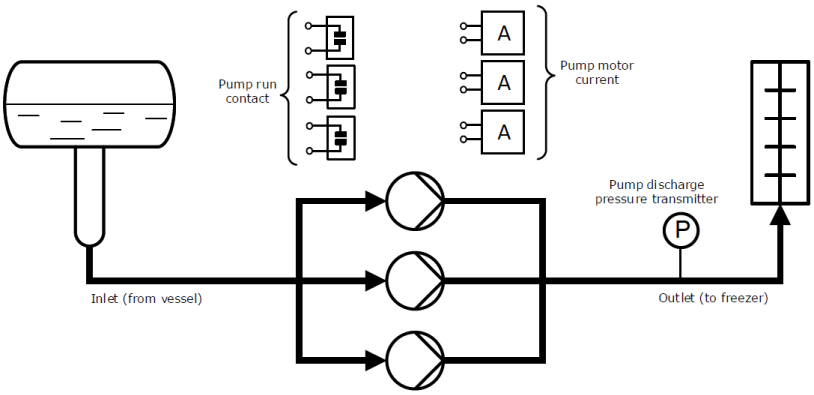

PUMP CAVITATION – Two pumps (one active, one in standby)

Pump cavitation occurs when the differential pressure between the vessel and the pumps drop below the setpoint. If the pump differential pressure drops below the "Cavitation low Diff pressure SP" for a period of time set in "Cavitation -Low Diff Timer SP" (default 5s), the pump will be shut down for the time period set in parameter "Cavitation inhibit timer SP" (default 60s).
If at any time during "Cavitation Event Time Period SP" (default 1hr) cavitation events reaches "Cavitation Max Events SP", the pump will be shutdown, an alarm issued, and the standby pump will be started.

PUMP CAVITATION - Three Pumps (two active, one in standby)

The logic is the same except that both pumps will be shut down together and re-started together during cavitation period. If both pumps fail due to cavitation events reaching setpoint maximum events, the standby pump is started.

PUMP MODE - Configure

Configuring the Pump Mode parameters P1, P2, and P3 may be accessed from the Main menu in one of two ways.

By going to "Pump Modes", and selecting the appropriate pump (see below)

or by going to "Parameters" > "Vessel System Config" , and then selecting the appropriate pump from the menu.

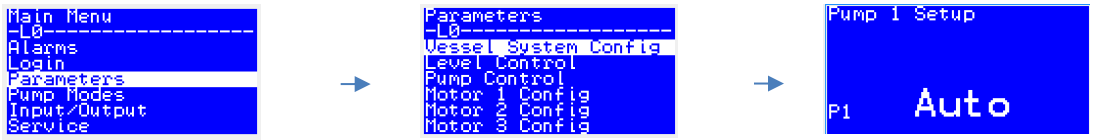

PUMP SPEED CONTROL

Pump speed control parameters via VFD can be accessed from the MCX Main Menu Parameters > Pump Control Main

The first parameter to set is the VFD Ramp time. Input the ramp up time of the VFD. This is the time for the pumps to get to the speed reference set by the analog output AO 3. Setting this ramp time tunes the MCX and minimizes false alarms.

Analog output AO 3 value to the VFD AI input speed reference is a 0-10V signal. The speed reference value is determined by first setting VSC parameter "VFD Speed Control – Percent or Diff.Prs." The choice of using a constant speed value determined by a percent of the minimum and maximum speed difference of the VFD or by a using a differential pressure setpoint that varies the VFD speed based on the differential pressure between the vessel and the pump(s). The Diff.Prs method uses a PI controller with proportional and integral setpoints. For more information, reference the parameter listing "Pump Control Main" .

PUMP RUNTIME HOURS and EQUALIZATION

Pump runtime hours parameters can be accessed from the Main Menu "Service". Login to level 3 with password (default is 300). This gives visibility to all pertinent runtime parameters.

- First ensure runtime clock is set correctly. Under the "Service" menu, select "RTC setup" and input the current date and time using the left, right, up, down and enter buttons on the keypad.
- Next, initialize the pump period runtime hours for first use by performing a reset. Under the "Service" menu, select

"Reset PeriodRun Hrs". Highlighted will be RS PeriodRunHrs Pump1. Press the ENTER or RETURN button to initialize. Repeat the same action for the remaining two pumps. Period runtime hours can be reset based on a maintenance schedule. The reset date will be captured and can be viewed in the Pump Runtime Hrs screen.

- Initialize the pump life runtime hours for first use in the same way above but go to "Reset LifeRun Hrs". Resetting Lifetime hours after first use is only recommended when a new pump is put into service.

Pump runtime equalization parameters can be accessed from the Main Menu "Service" > "Pump RT Equalization".

- By default, runtime equalization feature is enabled. Go to parameter PRE "Enable Pump Runtime Equalization" to disable.
- The pump runtime equalization can be based on either lifetime run hours or current period runtime hours. By default period runtime hours is used.
- Pump runtime equalization will occur once a week at a certain time. This weekly time is set in parameters WDY "Weekday", HR "Hour", and MIN "Minutes". If there is one pump in "Auto" mode and at least one other in "SBY", the pump with the most hours is put in "SBY" mode and the pump with the least amount of hours is put in "Auto" mode.

SUPERHEAT for OIL RECTIFIER

Superheat is generated through the heat exchanger (HEX) and ensures CO2 or another liquid is in a vapor or gas state. Superheat is controlled by an EEV valve on the inlet of the HEX. Regulation of the EEV valve is done through a single loop control principle using one pressure transmitter, in this case the vessel, and an RTD sensor (S2) to measure temperature of the superheated gas. The vessel pressure correlates to a saturated temperature. The difference between the vessel saturated temperature and the S2 temperature sensor at the outlet of the HEX is the Superheat value (K). The MCX uses a similar approach to that of the Danfoss EXD316 superheat controller. Please refer to document "Data sheet Superheat controller type EXD 316; DKRCC.PDRT0.A1.02" for more detailed information. The superheat oil rectifier functionality can be employed by setting the parameter ORE "Superheat Main Switch" to "ON".

The oil rectifier will only run when both DI16 (SH Oil Rectifier Activation) is energized and a minimum of one pump is running. This will also energize output DO9, the oil rectifier safety solenoid or ball valve. If not employing a safety valve a UPS backup to the EEV is recommended for full closure. A Danfoss EKF 1A/2A stepper valve driver module (080G5030/080G5035S) for the EEV is easily setup for use with the MCX Analog output value at AO5. AO5 is a 0-10V output signal to the stepper valve driver input.

Stepper Valve Driver EKF 1A

Documentation – Installation Guide: AN375548103097en-000204

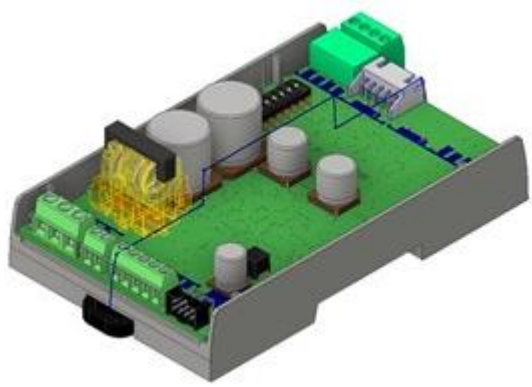

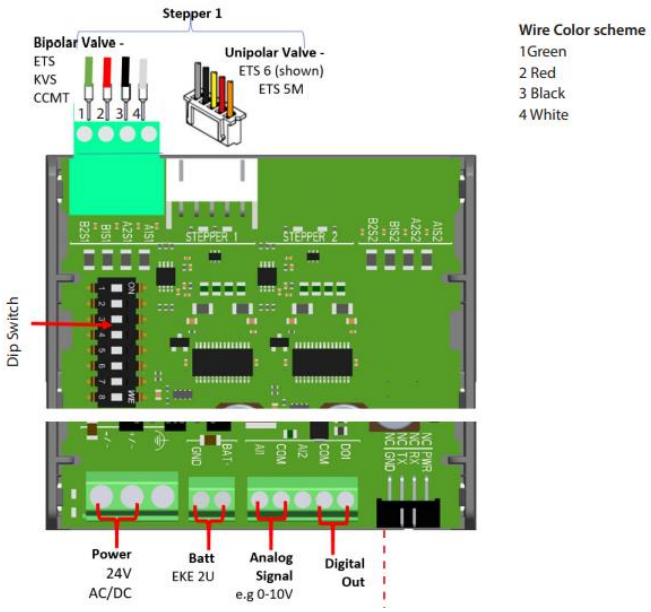

Stepper Valve Driver EKF 2A

Status Screens

Screen Navigation

PUMP RUNTIME HOURS

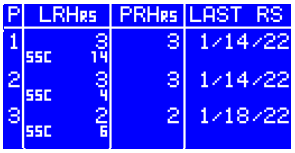

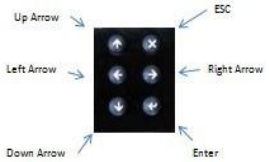

Key functionality:
ENTER - Enter MAIN MENU and set parameters
ESC - Escape to MAIN MENU and view alarms
UP arrow - View Pump Status and Runtime Hours
Left arrow - View Oil Rectifier Status
Down arrow - View Float switch Status and Transfer Solenoid
Right arrow - View Vessel/Pump Differential Pressure and Cavitation Status

PUMP STATUS

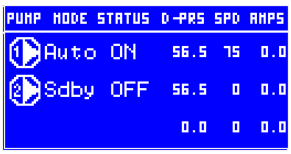

SUPERHEAT OIL RECTIFIER

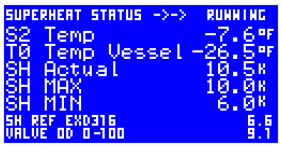

Main Screen

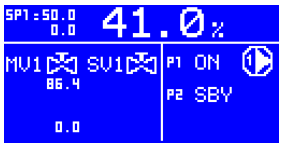

PUMP CAV MAIN

PUMP CAV MULTIPLE

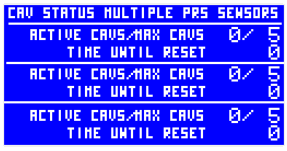

FLOAT SWITCH STATUS

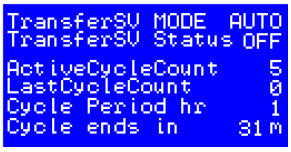

TRANSFER SOLINOID

Main Status Screen

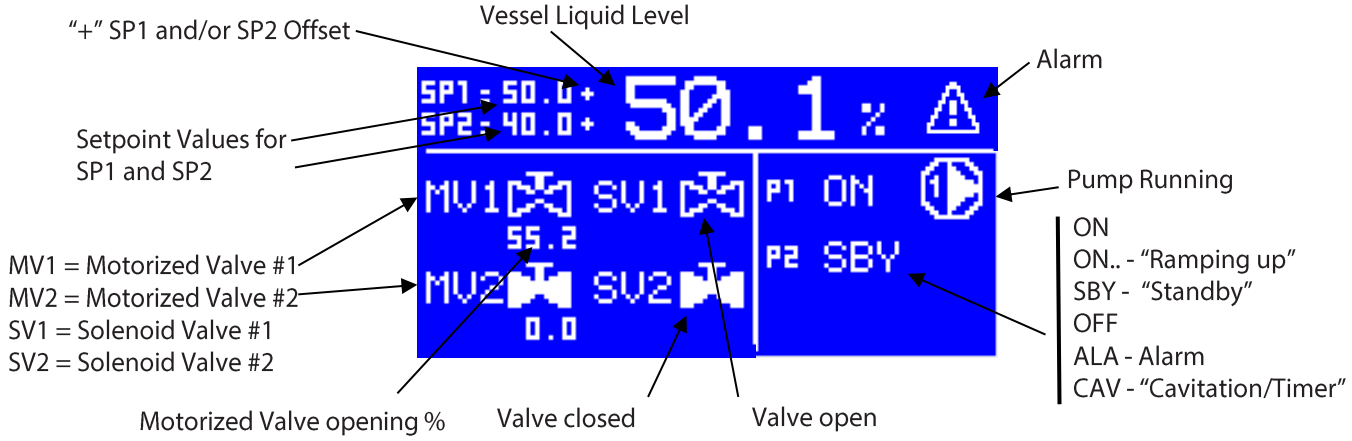

Transfer Solenoid Status Screen

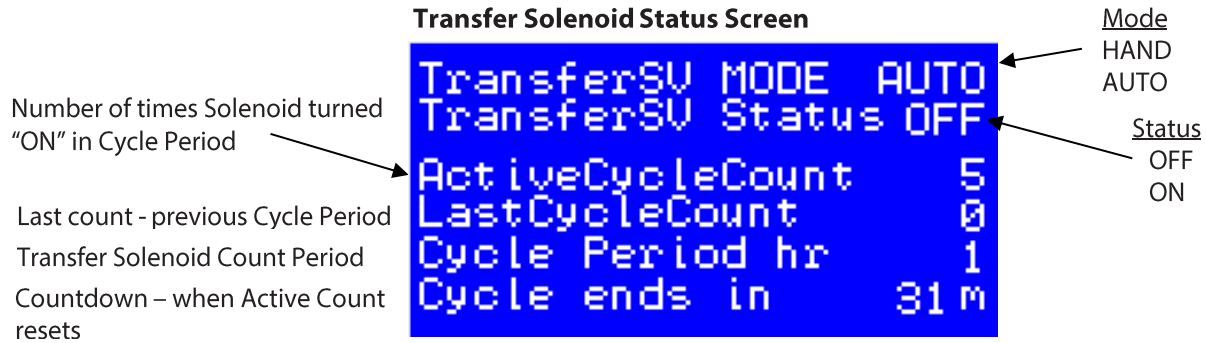

Float Switch Status Screen

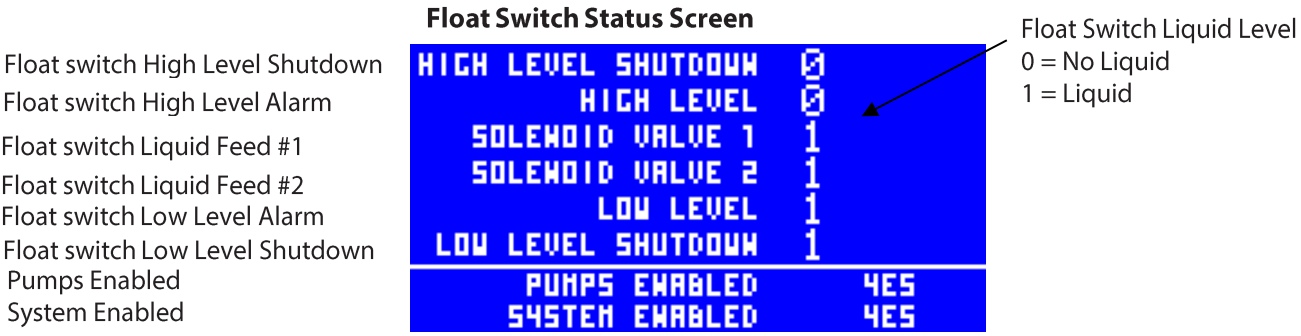

Pump Status Screen

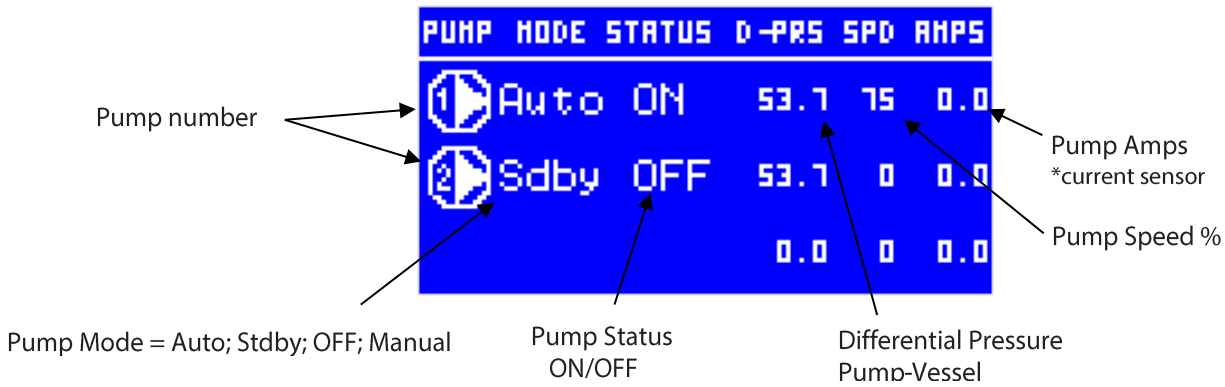

Vessel/Pump Prs. CAV Main – One Discharge Pressure Sensor

Vessel Pressure
Pump Discharge Pressure
HI- LO Diff Pressure Setpoints
Differential or Delta Pressure
Cavitation Events Active/Max
Cavitation CTD Timer

```
VESSEL PRS              158.1 Psi
PUMP DISCH PRS          214.6 Psi
          HI 69.6
DIFF PRS ->->->->->-> 56.5Psi
          LO 10.2
 CAV STATUS (1) DIS-DP SENSOR
ACTIVE CAVS/MAX CAVS     0/ 5
    TIME UNTIL RESET   3600s
```

Pump - Vessel Differential Pressure
(highest value if more than one sensor)

Pump CAV - Multiple Discharge Pressure Sensors

Active Cavitations
Max Cavitations within period
Pump number
*If shown, pump is active in setup
*multiple discharge sensors only.
Period countdown in seconds before active Cav reset to zero

```
CAV STATUS MULTIPLE PRS SENSORS
  ACTIVE CAVS/MAX CAVS   0/ 5
      TIME UNTIL RESET      0
  ACTIVE CAVS/MAX CAVS   0/ 5
      TIME UNTIL RESET      0
  ACTIVE CAVS/MAX CAVS   0/ 5
      TIME UNTIL RESET      0
```

Pump Runtime Hours Screen

Lifetime Run Hours
Period Run Hours
Last Reset Date of PRHrs
Pump number
Pump Start-Stop Cycle Count

P	LRHrs	PRHrs	LAST RS
1	3	3	1/14/22
	SSC 14		
2	3	3	1/14/22
	SSC 4		
3	2	2	1/18/22
	SSC 6		

Superheat Oil Rectifier Status

- DISABLED
- RUNNNING
- STOPPED

RTD PT1000 HEX Outlet
Vessel Temp
Superheat Actual
Superheat Maximum
Superheat Minimum
Superheat Reference
EEV Opening Degree

```
SUPERHEAT STATUS ->-> RUNNING
S2 Temp              -7.6°F
T0 Temp Vessel      -26.5°F
SH Actual            10.5K
SH MAX               10.0K
SH MIN                6.0K
SH REF EXD316           6.6
VALVE OD 0-100          9.1
```

Setting or Viewing Parameters

From the main screen, set or view parameters by pressing the Enter button (lower right button) on the controller keypad.

Once the Main Menu is accessed use the Up/Down arrows to scroll to the parameter you want to change or view. Press the ENTER button to edit the parameter and scroll up or down or left to right to change value. Once value is changed, press the ENTER button again to save. Press the X button on the keypad to escape out to previous menu or the main screen.

Example: Change Modbus Address

Select Service → General → Serial Settings to edit the Modbus communication Address of the control.

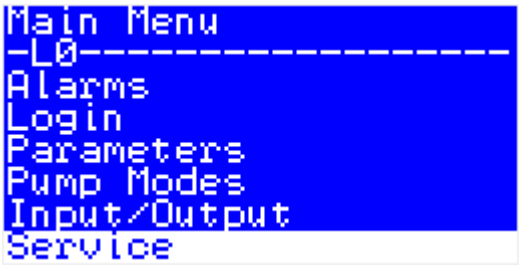

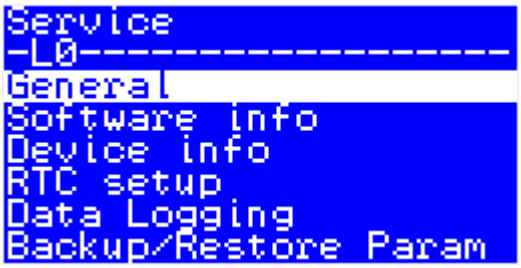

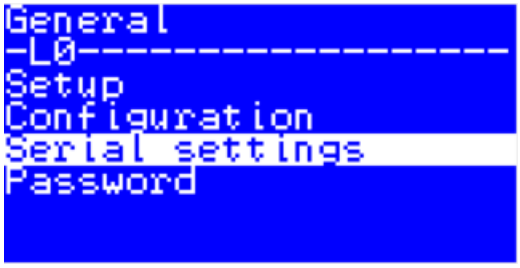

BIOS and Application upgrade – USB Flash Drive

A USB flash drive can be used to upgrade the BIOS and application of MCX15B2.
It can also be upgraded via Myk programmer or the web interface, see *User Guide BC337329499681 to upgrade through Web Interface.*

Install application upgrades from USB flash drive

To update the MCX15B2 application from a USB flash drive:

- Make sure the USB flash drive is formatted as FAT or FAT32.
- Save the firmware in a file named *app.pk* in the root folder of the USB flash drive.
- Insert the USB flash drive into the USB connector of the device; turn it off and on again and wait a few minutes for the update.

Notes:

- Do not change the file name of the application (it must be *app.pk*) or it will not be accepted by the device.

Install BIOS upgrades from USB flash drive

To update the MCX15B2 BIOS from USB flash drive:

- Make sure the USB flash drive is formatted as FAT or FAT32.
- Save the BIOS in the root folder of the USB flash drive.
- Insert the USB flash drive into the USB connector of the device; turn it off and on again and wait a few minutes for the update.

Notes:

- Do not change the file name of the BIOS (must be *mcx20b2.bin* - compatible with mcx15b2) or it will not be accepted by the device.
- In certain instances, some manufactures of flash drives are not compatible with the MCX. Recommendation: SanDisk.

Web Interface - Refer to Danfoss User Guide MCX15B2/MCX20B2 Programmable Controller for more detailed information. BC337329499681

Brief Overview

- Access to Web Interface can be accessed with most mainstream internet browsers. Best viewed in Chrome or Microsoft Edge.
- Gateway to access controllers connected with CAN bus.
- Displays History log data, real time graphs and alarms.
- System Configuration – enable Modbus TCP slave, FTP, Syslog, HTTPS port etc..
- Firmware (BIOS) and application software update.

Login

- By default, MCX controller is configured for DHCP, dynamic IP address assigned by server.
- Enter IP address in web browser address bar. – see below **Modbus TCP/IP** on how to find IP address.
- Login in with default credentials: Username=admin ; Password=PASS
  Password change is requested at first login.
- Once connected, you can start to configure users, web interface, other networked devices connected to the main MCX15B controller through CAN bus.

Getting Started

- For each device on the Network configuration, an application description file .CDF must be associated with it. The .CDF file must be created by MCX Shape tool, loaded to MCX controller through webserver > Files, and then associated to the corresponding device.
- Update the Network configuration, and SAVE. SAVE “Settings”.
- For viewing History, enable in main menu. The hisdata.log file is generated by the MCX controller and saved on a USB thumb drive (1:/hisdata.log) the following variables/tags are available for data access through the “History” Main menu item. Add any of the following to view with “DRAW”

© Danfoss

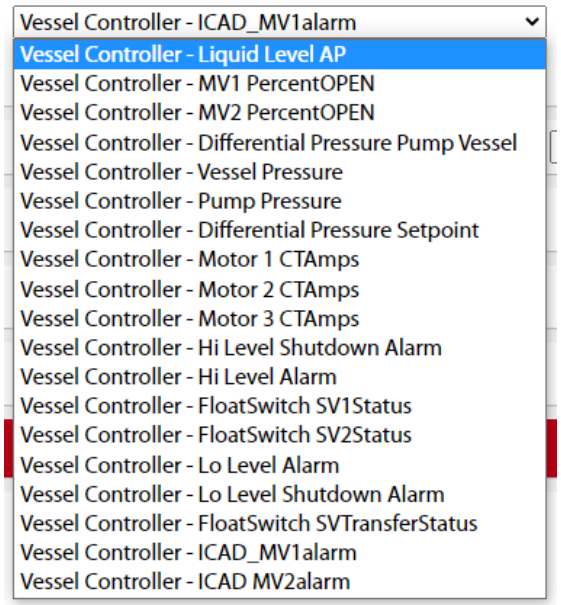

- History records can be reset or sampling frequency modified on the MCX Controller in parameters.

Modbus TCP/IP Communications

Read current network configuration without web interface

If you can't access the web interface, you can still read the network configuration using a USB flash drive:

- Make sure the USB flash drive is formatted as FAT or FAT32.
- Within 10 minutes of MCX15/20B2 powering up, insert the USB flash drive into the USB connector of the device.
- Wait about 5 seconds.
- Remove the USB flash drive and insert into a PC. The file mcx20b2.cmd will contain the basic information about the product.

Here is an example of the content:

- Or enter BIOS to find IP address by pressing X+ENTER on power up. GEN SETTINGS>TCP/IP
- Or through the software tool MCXWfinder.exe, which may be downloaded from the MCX website.

[node_info] ip=10.10.10.45/24 mac_address=00:07:68:ff:ff:f6 sw_descr=MCX20B2 0c41 node_id=1 CANBaud=50000 Key=bsFJt3VWi9SDoMgz	 < - Current ip address < - Mac address < - Bios software description < - CANbus Node ID < - CANbus baudrate < - Temporary key generated at file creation

Backup/Restore Parameters

A USB flash drive can be used backup and restore parameters.

- Insert a USB flash drive to the controller and go to Main menu item Service > Backup/Restore Parameters.
- Highlight and select Backup Parameters to write a backup file "dev001.dat" to drive.
- Highlight and select Restore Parameters to load backup file "dev001.dat" to the controller.

PARAMETER TABLE

For system configuration, It is recommended to set parameters in the "Vessel System Config" menu first. Observe that many of the individual parameters listed below will only be visible when particular parameters have been set in "Vessel System Config" menu, thereby, irrelevant parameters are filtered out during the setup of the MCX Vessel Controller.

© Danfoss

Label ID	Parameter Name	Description and selection options	Min	Max	Factory Setting	Unit	RW RO	Modbus Address
Parameters > Vessel System Config								
LLS	Liquid Level Sensor Type	**Select the type of sensor used for level control**. 0 = PROBE - Analog liquid level probe (LP) 1 = FLOAT – Float/Level switches (FS) **Note**: In FLOAT (FS) mode, both liquid feed floats (SV1-SV2), High Level Shutdown (HLSD), and Low Level Shutdown (LLSD) are enabled by default.	0	1	0 - PROBE		RW	3001
FPD	Liquid Feed Switch Control w/Probe for level Display	**Liquid Feed Switch Control w/Probe for level Display** Enable to use an analog Probe for liquid level display when using switches for liquid feed control. 0= No 1 = Yes	0	1	0 - No		RW	3189
VCF	Liquid Feed Valve Configuration	**Select Liquid Feed Valve configuration of system.** 0 = 1SV – One liquid feed solenoid valve 1 = 2SV – Two liquid feed solenoid valves 2 = 1MV – One liquid feed motorized valve (LP only) 3 = 2MV – Two liquid feed motorized valves (LP only) 4 = None – No Liquid feed control. SV1 and SV2 disabled.	0	4	2 - 1MV		RW	3002
PN	Number of Pumps	**Number of pumps used in system.** 0 = No pumps 1 = One pump 2 = Two pumps (one is in standby) 3 = Three pumps (one or two are in standby)	0	3	2		RW	3003
PSC	System Pressure Sensor Config	**System Pressure Configuration** 0 = 1-DischargePS (1-Pump and 1-Vessel) 1 = 2-DischargePS (2-Pump and 1-Vessel) 2 = 3-DischargePS (3-Pump and 1-Vessel) 3 = 1-DP Transmitter (1-Delta Pump/Vessel Sensor) 4 = 2-DP Transmitter (2-Delta Pump/Vessel Sensors) 5 = 3-DP Transmitter (3-Delta Pump/Vessel Sensors)	0	5	0		RW	3111
P1	Pump 1 Mode	**Pump 1 configuration.** 0 = Auto - system controlled 1 = StdBy – standby/ready 2 = Off 3 = Manual - On	0	3	0 - Auto		RW	3004
P2	Pump 2 Mode	**Pump 2 configuration.** Same as above P1	0	3	1 - StdBy		RW	3005
P3	Pump 3 Mode	**Pump 3 configuration.** Same as above P1	0	3	2 - Off		RW	3006
HSF	High Level Shutdown Float Switch	**Decide if a High Level Shutdown Float switch will be employed.** 0 = NO 1 = YES	0	1	1 - YES		RW	3007
HSP	High Level Shutdown Float Switch % FS	**High Level Shutdown Float/Level Switch Percent** In Float mode (FS), set percent to be shown on Main Screen when HLSD Float input is de-energized.	0	100	100	%	RW	3175
HAF	High Alarm Float Switch	**Decide if a High Alarm Float switch will be employed.** 0 = NO 1 = YES	0	1	0 - NO		RW	3008
HAP	High Alarm Float Switch % FS	**High Level Float/Level Switch Percent** In Float mode (FS), set percent to be shown on Main Screen when HLA Float input is de-energized.	0	100	80	%	RW	3176
S1P	SV1 Solenoid Float Switch % FS	**SV1 Solenoid Valve Float Switch Percent** In Float mode (FS), set percent to be shown on Main Screen when SV1 Float Switch input is de-energized.	0	100	60	%	RW	3179
S2P	SV2 Solenoid Float Switch % FS	**SV2 Solenoid Valve Float Switch Percent** In Float mode (FS), set percent to be shown on Main Screen when SV2 Float Switch input is de-energized.	0	100	40	%	RW	3180
LAF	Low Level Alarm Float Switch	**Decide if a Low Level Alarm Float switch will be employed.** 0 = NO 1 = YES	0	1	0 - NO		RW	3009
LAP	Low Level Alarm Float Switch % FS	**Low Level Float/Level Switch Percent** In Float mode (FS), set percent to be shown on Main Screen when SV2 is energized and Low Level Float is still energized.	0	100	20	%	RW	3177
LSF	Low Level Shutdown Alarm Float Switch	**Decide if a Low Level Shutdown Float switch will be employed.** 0 = NO 1 = YES	0	1	0 - NO		RW	3010
LSP	Low Level Shutdown Alarm Float Switch % FS	**Low Level Shutdown Float/Level Switch Percent** In Float mode (FS), set percent to be shown on Main Screen when Low Level Float Alarm (LLA) is de-energized and Low Level Shutdown Float (LLSD) is energized. NOTE: When the Low Level Shutdown float is de-energized the display will show 0%.	0	100	10	%	RW	3178
TSV	Transfer Solenoid Valve	**Decide if a Transfer Solenoid Valve will be employed.** 0 = NO 1 = YES	0	1	0 -NO		RW	3105
TFS	Transfer Float Switch	**Decide if a Transfer Float switch will be employed.** 0 = NO 1 = YES	0	1	0 - NO		RW	3011
LED	Level Output	**Selection of Liquid Level Output Voltage Range (A04)** 0 = 0-10V 1 = 2-10V *LED Liquid Level Display *Note: 4-20mA (A04+) output available at terminal strip (panel)	0	1	1 – 2-10V		RW	3012
IOE	Enable Custom I/O Configuration	**Enable Custom I/O Configuration** 0 = NO 1 = YES (access to IOC parameter)	0	1	NO		RW	3191
IOC	Custom I/O Configuration	**Custom I/O Config for liquid feed switch control only FS** 0 = Default (SV1 and SV2 outputs energized when Inputs DI9 or DI10 are Closed or Energized) 1 = Configuration 1 (SV1 and SV2 outputs are energized when Inputs DI9 or DI10 are Open or De-energized)	0	1	DEF		RW	3192

© Danfoss

Classified as Public

Label ID	Parameter Name	Description and selection options	Min	Max	Factory Setting	Unit	RW RO	Modbus Address
Parameters > Level Control								
SP1	Liquid Level Control Setpoint 1 LP	**Liquid Level Control Setpoint 1** Setpoint for when Liquid feed valve1 is energized. Liquid feed valve1 maybe either one solenoid valve (SV1) or one motorized valve with solenoid valve safety. (MV1 + SV1)	0	100.0	50.0	%	RW	3013
SP2	Level Control Setpoint 2 LP	**Liquid Level Control Setpoint 2** Setpoint for when Liquid feed valve2 is energized. Liquid feed valve2 maybe either one solenoid valve (SV2) or one motorized valve with solenoid valve safety. (MV2 + SV2)	0	100.0	40.0	%	RW	3014
NZ1	Dead Band Setpoint 1 LP	**Dead Band Setpoint 1 – Motorized Valve Only** When liquid Level reaches SP1, this value as a percentage of SP1, creates a band around SP1 where no regulation from the PI controller will take place or motorized valve position locked. Example: SP1 = 50% NZ1 = 2% Dead band Liquid Level = 49 – 51%	0	10.0	4.0	%	RW	3015
NZ2	Dead Band Setpoint 2 LP	**Dead Band Setpoint 2 – Motorized Valve Only** When liquid Level reaches SP2, this value as a percentage of SP2, creates a dead band around SP2 where no regulation from the PI controller will take place. Example: SP2 = 25% NZ2 = 2% Dead band Liquid Level = 24.5 – 25.5%	0	10.0	2.0	%	RW	3016
SP3	High Level Shutdown Setpoint LP	**Liquid level setpoint for activating a High Level Shutdown Alarm (HLSD)** Dedicated HLSD DO1 output Alarm type is selectable in parameter AHR and resets after delay. (set delay time OFF in alarms menu)	50	100.0	90.0	%	RW	3017
SP4	High Level Alarm Setpoint LP	**Liquid level setpoint for activating a High Level (HLA) Alarm.** Dedicated HLA DO12 output Alarm is auto reset (set On/Off delay time in alarms menu)	50	100.0	80.0	%	RW	3018
SP6	Low Level Alarm Setpoint LP	**Liquid level setpoint for activating a Low Level Alarm** DO15 output active when parameter SCA is set to (3) Alarm is auto reset (set On/Off delay time in alarms menu)	0	50.0	25.0	%	RW	3020
SP5	Low Level Shutdown Setpoint LP	**Liquid level setpoint for activating a Low Level Shutdown (LLSD) Alarm** Shuts down pumps after delay due to low liquid level Dedicated LLSD DO13 output (set On/Off delay time in alarms menu)	0	50.0	10.0	%	RW	3019
SP8	Low Level Shutdown Reset Pumps ON LP	**Low Level Shutdown Reset Pumps ON SP LP** When using a level probe, sets the liquid level that clears LLSD alarm and turns pumps back "ON".	0	100.0	35.0	%	RW	3096
SP9	Low Level Shutdown Reset Limit Switch Select	**Low Level Shutdown Reset Alarm with Limit Switch** When employing a low level shutdown float switch, select the desired switch that resets the alarm and restarts the pumps when the liquid level rises. 0 = HLSD 1 = HLA 2 = SV1 3 = SV2 4 = LLA 5 = Delay only	0	5	Delay only		RW	3190
SP7	Low Level Shutdown Pumps Delay ON	**Low Level Shutdown Float Switch – Pumps Delay ON** When using a low level shutdown float switch, sets the delay time when the pumps restart after liquid level rises above the low level shutdown switch.	0	3600	20	s	RW	3095
DB1	Liquid Feed SV1 ON DIFF LP	**Liquid feed solenoid valve #1 ON differential setpoint**. SP1 – DB1 = Level control setpoint that opens Solenoid Valve1. Example: SP1 = 50% DB1 = 5% Liquid level that turns on Solenoid Valve1 = 50 – 5 = 45% *Not configured if Motorized Valve1 is employed for liquid feed. SV1 will open at when liquid level is at SP1 setpoint.	0	100.0	5.0	%	RW	3021
DB2	Liquid Feed SV2 ON DIFF SP LP	**Liquid feed solenoid valve #2 ON differential setpoint**. SP2 – DB2 = Level control setpoint that opens Solenoid Valve2 Example: SP2 = 35% DB2 = 5% Liquid level that turns on Solenoid Valve2 = 35 – 5 = 30% *Not configured if Motorized Valve2 is employed for liquid feed. SV2 opens at SP2 value.	0	100.0	5.0	%	RW	3022
SV1	Liquid Feed SV1 OFF DIFF SP LP	**Liquid feed solenoid valve #1 OFF differential setpoint**. SP1 + SV1 = Level control setpoint that closes Solenoid Valve1. Example: SP1 = 50% SV1 = 5% Liquid level that turns off Solenoid Valve1 = 50 + 5 = 55% Must configure for motorized valves or if employing solenoid valves only. If employing a motorized valve, set value equal to or higher then NZ1 parameter.	0	100.0	5.0	%	RW	3023
SV2	Liquid Feed SV2 OFF DIFF SP LP	**Liquid feed solenoid valve #2 OFF differential setpoint**. SP2 + SV2 = Level control setpoint that closes Solenoid Valve2 Example: SP2 = 35% SV2 = 5% Liquid level that turns off Solenoid Valve2 = 35 + 5 = 45% Must configure for motorized valves or if employing solenoid valves only. If employing a motorized valve, set value equal to or higher then NZ2 parameter.	0	100.0	5.0	%	RW	3024
VD1	Liquid Feed SV1 OFF Delay FS	**Liquid feed solenoid valve #1 OFF delay time** When Float switch SV1 de-energizes, sets time delay before solenoid valve SV1 starts to close	0	120	20	s	RW	3025
VD3	Liquid Feed SV1 ON Delay FS	**Liquid feed solenoid valve #1 ON delay time** When Float switch SV1 energizes, sets time delay before solenoid valve SV1 starts to open	0	120	5	s	RW	3026
VD2	Liquid Feed SV2 OFF Delay FS	**Liquid feed solenoid valve #2 OFF delay time** When Float switch SV2 de-energizes, sets time delay before solenoid valve SV2 starts to close	0	120	20	s	RW	3027
VD4	Liquid Feed SV2 ON Delay FS	**Liquid feed solenoid valve #2 ON delay time** When Float switch SV1 energizes, sets time delay before solenoid valve SV1 starts to open	0	120	5	s	RW	3028
TSD	Transfer Solenoid ON delay FS	**Transfer solenoid valve ON delay time** Sets time delay before transfer solenoid valve starts to open	0	1200	2	s	RW	3029

© Danfoss

Classified as Public

Label ID	Parameter Name	Description and selection options	Min	Max	Factory Setting	Unit	RW RO	Modbus Address
TSP	Transfer Solenoid SP LP	**Transfer solenoid setpoint level** Sets the level at which the transfer solenoid opens.	0	100.0	75.0	%	RW	3030
THA	Transfer Solenoid HAND/AUTO	**Transfer solenoid set to HAND or AUTO MODE** MODE: 0 = HAND (manual-ON) 1 = AUTO (System controlled)	0	1	1 - AUTO		RW	3031
THL	Transfer Solenoid HAND Level OFF SP LP	**Transfer solenoid "OFF" setpoint in HAND mode employing Level Probe control** Sets the liquid level that the Transfer Solenoid valve will close when MODE is set to HAND.	0	100.0	70.0	%	RW	3032
THT	Transfer Solenoid HAND Time ON SP FS	**Transfer solenoid "ON" time setpoint in HAND mode employing Float Switch** Sets the time the Transfer Solenoid Valve will be "ON" before it closes when in HAND mode.	0	600	30	s	RW	3033
THS	Transfer Solenoid HAND Safety Float Selection FS	**Transfer solenoid Float Safety in HAND mode** As a safety precaution, if the time is set to high in parameter THT above which causes the liquid level to decrease to the selected float below, the transfer solenoid will close. 0 = Low level Shutdown Float switch (LLSD) 1 = Low level Alarm Float switch (LLA) 2 = Liquid Feed Float switch SV2 (LFSV2) 3 = Liquid Feed Float switch SV1 (LFSV1)	0	3	1 - LLA		RW	3034
TRC	Transfer Solenoid Counter Reset	**Transfer solenoid Counter Reset** Manual reset of Transfer solenoid counter 0 = no reset 1 = reset counter	0	1	0		RW	3035
TCT	Transfer Solenoid Count Time Period	**Transfer solenoid Count Time period** Set the time period for counting how many times the transfer solenoid has turned on and off (events).	0	9999	1	h	RW	3036
PRO	MV Proportional Differential	**Motorized Valve Proportional-Differential** Sets the differential or proportional band of PI controller (Kp) for both motorized valves MV1 and MV2.	0	50.0	5.0		RW	3037
INT	MV Integral	**Motorized Valve Integral Time** Sets the Integral Time value of PI controller in seconds for motorized valves MV1 and MV2.	0	600	30	s	RW	3038
RVP	Run Liquid Feed Valves in Parallel	**Run Liquid Feed Valves in Parallel** Sets MV2 to run in parallel with MV1 and parameter setpoints. 0 = NO 1 = YES Provides a faster response to liquid demand. **Note:** *All MV2 settings for sequential operation are not changed, but are ignored.*	0	1	0 - NO		RW	3097
Parameters > Pump Control Main								
PSM	Pump Smart Mode	**Pump Smart Mode Auto Configuration** 0 = NO -Operator required to set pump mode when manual alarm is reset. 1 = YES -Pump modes are set automictically when manual alarm is reset. Also, when all pumps are in manual alarm and reset, pumps will be configured according to period runtime hours.	0	1	YES		RW	3206
CDS	Cavitation - Low Diff Prs SP	**Cavitation – Low Differential Pressure Setpoint** Low differential pressure setpoint between vessel pressure and pump discharge pressure. If the differential pressure falls below this point for longer than the value set in "POD" parameter "Cavitation – Low Diff Timer SP", a cavitation event will occur in which the pumps will be held "OFF" for a period of time set in parameter CIT "Cavitation Inhibit Timer SP".	0	725.0	10.2	Psi	RW	3039
POD	Cavitation - Low Diff Timer SP	**Cavitation – Low Differential Timer Setpoint** Time delay, in a low differential pressure condition, before a Cavitation event will occur. *If differential pressure drops below CDS but then rises above CDS within set time period POD, a Cavitation event (Pumps held off) will **not** occur.	0	60	5	s	RW	3040
CIT	Cavitation Inhibit Timer SP	**Cavitation Inhibit Timer Setpoint** Time value in seconds that active pumps will be held "OFF" when a cavitation event occurs.	0	600	60	s	RW	3041
CTP	Cavitation Time Period SP	**Cavitation Time Period Setpoint** Time period in hours when Cavitation events are counted.	0.1	24	1.0	h	RW	3042
CMS	Cavitation Max Events SP	**Cavitation Maximum Events Setpoint** Count setpoint for maximum cavitation events within the "Cavitation Time period SP" before a Cavitation failure occurs. If a failure occurs, pumps will be held "OFF" indefinitely until an operator manually reconfigures pumps in parameter P1,P2,P3 and then resets the alarms.	0	99	5		RW	3043
CVR	Cavitation Reset Counter	**Cavitation Reset Counter** Manual reset of Cavitation Counter 0 = NO 1 = YES	0	1	0 = NO		RW	3044
CR1	Pump1 Cavitation Counter Reset	**Pump1 Cavitation Counter Reset** Manual reset of Cavitation Counter for Pump1 when employing more than one differential or delta pressure sensor. 0 = NO 1 = YES	0	1	0 = NO		RW	3129
CR2	Pump2 Cavitation Counter Reset	**Pump2 Cavitation Counter Reset** Manual reset of Cavitation Counter for Pump1 when employing more than one differential or delta pressure sensor. 0 = NO 1 = YES	0	1	0 = NO		RW	3130
CR3	Pump3 Cavitation Counter Reset	**Pump3 Cavitation Counter Reset** Manual reset of Cavitation Counter for Pump1 when employing more than one differential or delta pressure sensor. 0 = NO 1 = YES	0	1	0 = NO		RW	3131
DTA	Pump Aux Alarm Delay Time	**Pump Aux/Run Alarm Delay Time** Time delay before pump(s) output is de-energized and an alarm issued due to the pump(s) aux or run contacts not closing.	0	60	2	s	RW	3045

© Danfoss

Classified as Public

Label ID	Parameter Name	Description and selection options	Min	Max	Factory Setting	Unit	RW RO	Modbus Address
PAR	Pump Aux Alarm Reset Type	**Pump Aux Alarm Reset Type** -1 = Automatic reset of alarm 0 = Manual reset of alarm 1-100 = Semi-automatic reset of alarm	-1	100	0		RW	3194
HDP	High Differential Pressure SP	**High Differential Pressure Setpoint** High differential pressure setpoint between vessel pressure and pump discharge pressure. If the pressure exceeds this value an Alarm (High Differential Pressure) will be issued and the Pumps will be held in an "OFF" state.	0	725.0	70.0	Psi	RW	3048
HPA	High Differential Pressure Alarm Type	**High Differential Pressure Alarm Type** Sets the mode or functionality of the High Differential Pressure alarm. **-1 = Automatic reset of alarm** If pressure goes above HDP SP (Alarm set) and then pressure goes below HDP SP, the alarm will automatically reset. **0 = Manual reset of alarm** If pressure goes above HDP SP (Alarm set) and then pressure goes below HDP SP, the alarm will require a manual reset. **1-100 = Semi-automatic reset of alarm** If pressure goes above HDP SP (Alarm set) and then pressure goes below HDP SP, the alarm will reset automatically until it reaches the number of times (set/reset) of a value greater than 0, at which time a manual reset of the alarm will be required.	-1	100	-1		RW	3049
HPS	High Differential Pressure Alarm Pumps At-Speed Delay	**High Differential Pressure Alarm delay when Pumps are at Speed.** When the pumps are at-speed or running, and a High Differential pressure occurs (greater than HDP), this setting will Delay the time, in seconds, before a High Differential Pressure Alarm is generated.	0	120	5	s	RW	3050
HPR	High Differential Pressure Alarm Pumps Ramp-up Delay	**High Differential Pressure Alarm delay when Pumps are ramping-up or starting.** When the pump(s) start or begin ramping up, occasionally a High Differential pressure may be present above HDP. This value will set a delay time, in seconds, before a High Differential Pressure Alarm is generated. Minimizes nuisance trips	0	120	20	s	RW	3104
PMO	Pump Minimum OFF Time	**Pump Minimum OFF Time** If the pumps were commanded to stop, this time will prevent the pumps from restarting immediately if a run command was given soon after the stop command.	0	9999	5	s	RW	3205
VRT	VFD Ramp time	**Variable Frequency Drive Ramp Time** Ramp time acceleration of VFD from Min speed to reference speed (up). This setpoint will fine tune the controller, it will not adjust the actual VFD ramp time. Input the actual ramp up time of the VFD.	0	120	10	s	RW	3047
VSC	Pump Speed Control – Percent or Diff.Prs	**Pump Speed Control – Percent or Differential Pressure** Control Pump speed either by Percent of VFD Max – Min speed or by the differential pressure between the Vessel and the Pumps 0 = Percent 1 = Differential Pressure	0	1	0		RW	3136
VMS	Pump Speed - Percent	**Variable Frequency Drive Maximum-Minimum speed percent** Adds an offset to the VFD minimum speed as a percentage of the difference between min and max VFD setpoints. Example: If max speed setpoint on VFD = 60Hz, min speed = 30Hz and setpoint = 50%, Then VFD speed is ((60-30) x .5) + 30Hz | 15Hz + 30Hz = 45Hz	0	100.0	75.0	%	RW	3046
VDS	Pump Speed Differential Prs.	**Pump Speed Differential Pressure** Sets the differential pressure setpoint for pump speed control. If the differential pressure is below this setpoint - dead band, the speed will continue to increase until the differential pressure is greater than or equal to setpoint. VFD speed will then remain constant in the dead band. If differential pressure rises above setpoint + dead band, the VFD speed will continue to decrease until the differential pressure drops below this setpoint. VFD speed will then remain constant in the dead band.	0	1500.0	29.0	Psi	RW	3132
VDB	Pump Speed Differential Prs. PI Dead Band	**Pump Speed Differential Pressure PI Dead Band** Adds a plus/minus percent dead band around value set in VDS. No regulation when diff. prs. reaches VDS value and then stays within this dead band, the VFD speed will be constant. Example: If VDS = 30psi and VDB = 10%, then dead band would be 27 – 33psi.	0	50.0	15.0	%	RW	3133
VSP	Pump Speed Differential Prs. Proportional Gain	**Pump/VFD Speed Differential Pressure Proportional Gain** Sets the proportional gain of the PI controller that regulates the VFD speed using differential pressure control.	0	100.0	40.0		RW	3134
VSI	Pump Speed Differential Prs. Integral Time	**Pump/VFD Speed Differential Pressure Integral Time** Sets the Integral Time of the PI controller that regulates the VFD speed using differential pressure control.	0	1000	30	s	RW	3135
EVH	Enable Vessel High Prs. – Pumps OFF	**Enable Vessel High Pressure – Pumps OFF** 0 = Disable 1 = Enable	0	1	Disable		RW	3143
VHP	Vessel High Pressure – Pumps OFF SP	**Vessel High Pressure Setpoint – Pumps OFF** Pressure setpoint when the Vessel is considered to be under high pressure. Once vessel pressure reaches this point the pumps will be forced to stop.	0	1500.0	161.0	Psi	RW	3142
VHO	Vessel High Pressure – Pumps ON Options	**Vessel High Pressure – Pumps ON Options** Decide when pumps restart when vessel pressure falls below VHP parameter setpoint. 0 = Delay (seconds) 1 = SP (Vessel pressure falls below setpoint in VPO parameter) 2 = Delay or SP (whichever event occurs first will restart pumps) 3 = Delay and SP (both events must occur before pumps restart)	0	3	0 - Delay		RW	3146
VPD	Vessel High Pressure – Pumps ON Delay	**Vessel High Pressure – Pumps ON** Delay time in seconds when pumps restart once the vessel pressure drops below VHP parameter SP	0	600	20	s	RW	3144

© Danfoss

Classified as Public

Label ID	Parameter Name	Description and selection options	Min	Max	Factory Setting	Unit	RW RO	Modbus Address
VPO	Vessel High Pressure – Pumps ON SP	**Vessel High Pressure Setpoint – Pumps ON** Pressure setpoint in the Vessel that will restart the pumps.	0	1500.0	145.0	Psi	RW	3145
PDO	Pump Mode Select DO14	**Select the Pump Mode Status that Energizes DO14** 0 = Auto (Min. one pump in Auto mode) 1 = Standby (Min. one pump in Standby mode) 2 = Auto and Standby (Min. one pump in Auto mode, and min. one pump in Standby mode) Note: Recommended use: Evaporator Release signal	0	2	Auto		RW	3169
Parameters > Motor 1 Config								
CT1	Pump Motor 1 CT	**Pump Motor 1 CT** 0 = Disable 1 = Enable	0	1	Disable		RW	3051
CL1	CT Low Amps Motor 1	**Low range amp value of current transducer (CT) for motor/pump #1**	0	50	0.0	A	RW	3052
CH1	CT High Amps Motor 1	**High range amp value of current transducer (CT) for motor/pump #1**	0	250	10.0	A	RW	3053
HT1	High Amp Trip Motor 1	**High Amp Trip Motor/Pump #1** Setpoint when a High Amp motor condition occurs. When motor current rises to or above High Amp Trip SP, an alarm will occur which must be reset manually.	0	300	10.0	A	RW	3054
HA1	High Amp Alarm Motor 1	**High Amp Alarm Motor/Pump #1** Setpoint when a High Amp motor condition occurs. If motor current rises to High Amp Alarm SP, an alarm will occur which is auto-reset when condition is cleared.	0	250	10.0	A	RW	3055
LA1	Low Amp Alarm Motor 1	**Low Amp Alarm Motor/Pump #1** Setpoint when a Low Amp motor condition occurs. When motor current decreases to Low Amp Alarm SP, an alarm will occur which is auto-reset when condition is cleared.	0	100	0.0	A	RW	3056
LT1	Low Amp Trip Motor 1	**Low Amp Trip Motor/Pump #1** Setpoint when a Low Amp motor condition occurs. If motor current decreases below Low Amp Trip SP an alarm will occur which must be reset manually.	0	100	0.0	A	RW	3057
M1S	Motor 1 Alarm-Fault Delay Running-at SPD	**Motor 1 Alarm-Fault Delay - Motor running at Speed Ref.** Sets the delay time in seconds before a High Amp Alarm or Fault occurs when the motor is running at speed reference.	0	120	5	s	RW	3098
M1R	Motor 1 Alarm-Fault Delay Ramping	**Motor 1 Alarm-Fault Delay - Motor Ramping to Speed Reference.** When the pump motor is starting or ramping to speed reference, this sets the delay time in seconds before a High Amp Alarm or Fault is generated.	0	120	10	s	RW	3099
Parameters > Motor 2 Config								
CT2	Pump Motor 2 CT	**Pump Motor 2 CT** 0 = Disable 1 = Enable	0	1	Disable		RW	3058
CL2	CT Low Amps Motor 2	**Low range amp value of current transducer (CT) for motor/pump #2**	0	50	0.0	A	RW	3059
CH2	CT high Amps Motor 2	**High range amp value of current transducer (CT) for motor/pump #2**	0	250	10.0	A	RW	3060
HT2	High Amp Trip Motor 2	**High Amp Trip Motor/Pump #2** Setpoint when a High Amp motor condition occurs. When motor current rises to High Amp Trip SP, an alarm will activate which must be reset manually, either remotely or locally on MCX.	0	300	10.0	A	RW	3061
HA2	High Amp Alarm Motor 2	**High Amp Alarm Motor/Pump #2** Setpoint when a High Amp motor condition occurs. When motor current rises to High Amp Alarm SP, an alarm will activate that is auto-resettable when condition is alleviated.	0	250	10.0	A	RW	3062
LA2	Low Amp Alarm Motor 2	**Low Amp Alarm Motor/Pump #2** Setpoint when a Low Amp motor condition occurs. When motor current decreases to Low Amp Alarm SP, an alarm will activate that is auto-resettable when condition is alleviated.	0	100	0.0	A	RW	3063
LT2	Low Amp Trip Motor 2	**Low Amp Trip Motor/Pump #2** Low motor Amps setpoint. When motor current decreases to Low Amp Trip Motor 2 SP an alarm will occur which must be reset manually, either remotely or locally on MCX.	0	100	0.0	A	RW	3064
M2S	Motor 2 Alarm-Fault Delay Running-at SPD	**Motor 2 Alarm-Fault Delay -Motor running at Speed Ref.** Sets the delay time in seconds before a High Amp Alarm or Fault/Trip occurs when the motor is running at speed reference.	0	120	5	s	RW	3100
M2R	Motor 2 Alarm-Fault Delay Ramping	**Motor 2 Alarm-Fault Delay -Motor ramping to Speed Ref** When the pump motor is starting or ramping to speed reference, this sets the delay time in seconds before a High Amp Alarm or Fault is generated.	0	120	10	s	RW	3101
Parameters > Motor 3 Config								
CT3	Pump Motor 3 CT	**Pump Motor 3 CT** 0 = Disable 1 = Enable	0	1	Disable		RW	3065
CL3	CT Low Amps Motor 3	**Low range amp value of current transducer (CT) for motor/pump #3**	0	50	0.0	A	RW	3066
CH3	CT High Amps Motor 3	**High range amp value of current transducer (CT) for motor/pump #3**	0	250	10.0	A	RW	3067
HT3	High Amp Trip Motor 3	**High Amp Trip Motor/Pump #3** Setpoint when a High Amp motor condition occurs. When motor current is equal or above High Amp Trip SP, an alarm will activate which must be reset manually, either remotely or locally on MCX.	0	300	10.0	A	RW	3068
HA3	High Amp Alarm Motor 3	**High Amp Alarm Motor/Pump #3** Setpoint when a High Amp motor condition occurs. When motor current is equal or above High Amp Alarm SP, an alarm will activate that is auto-resettable.	0	250	10.0	A	RW	3069
LA3	Low Amp Alarm Motor 3	**Low Amp Alarm Motor/Pump #3** Setpoint when a Low Amp motor condition occurs. When motor current equal or below Low Amp Alarm SP, an alarm will activate that is auto-resettable.	0	100	0.0	A	RW	3070

© Danfoss

Classified as Public

Label ID	Parameter Name	Description and selection options	Min	Max	Factory Setting	Unit	RW RO	Modbus Address
LT3	Low Amp Trip Motor 3	**Low Amp Trip Motor/Pump #3** Setpoint when a Low Amp motor condition occurs. When motor current decreases to or below Low Amp Trip SP an alarm will activate which must be reset manually, either remotely or locally on MCX.	0	100	0.0	A	RW	3071
M3S	Motor 3 Alarm-Fault Delay Running-at SPD	**Motor 3 Alarm-Fault Delay - Motor running at Speed Ref.** Sets the delay time in seconds before a High Amp Alarm or Fault/Trip occurs when the motor is running at speed reference.	0	120	5	s	RW	3102
M3R	Motor 3 Alarm-Fault Delay Ramping	**Motor 3 Alarm-Fault Delay - Motor Ramping to Speed Reference.** When the pump motor is starting or ramping to speed reference, this sets the delay time in seconds before a High Amp Alarm or Fault is generated.	0	120	10	s	RW	3103
Parameters > Vessel/Pump Prs Main								
VPS	Vessel Pressure Sensor Enable - Disable	**Vessel Pressure Sensor Enable – Disable** Enable or Disable Vessel pressure sensor			Enable			3106
VLP	Vessel MIN Pressure Sensor Value	**MIN range value of Vessel pressure sensor**	-14.4	72.5	0	Psi	RW	3072
VHV	Vessel MAX Pressure Sensor Value	**MAX range value of Vessel pressure sensor**	72.5	2175.0	435.0	Psi	RW	3110
PPS	Pump Pressure Sensor Enable - Disable	**Pump Discharge Pressure Sensor Enable – Disable** Enable or Disable pump discharge pressure sensor			Enable			3107
DLP	Discharge MIN Pressure Sensor Value	**MIN range value of Pump discharge pressure sensor**	-14.4	72.5	0.0	Psi	RW	3074
DHP	Discharge MAX Pressure Sensor Value	**MAX range value of Pump discharge pressure sensor**	72.5	2175.0	435.0	Psi	RW	3075
DML	Vessel/Pump DP Transmitter MIN Value	**Vessel/Pump Delta Transmitter Minimum Value** Minimum or low range value of DP transmitter	-14.4	72.5	0	Psi	RW	3112
DMH	Vessel/Pump DP Transmitter MAX Value	**Vessel/Pump Delta Transmitter Maximum Value** Maximum or high range value of DP transmitter	0	2175.0	435.0	Psi	RW	3113
Parameters > Vessel/Pump 1 Prs Cfg								
D1L	Vessel/Pump1 DP Transmitter MIN Value	**Vessel/Pump1 Delta Pressure Transmitter MIN Value** Minimum or low range value of DP transmitter	-14.4	72.5	0	Psi	RW	3114
D1H	Vessel/Pump1 DP Transmitter MAX Value	**Vessel/Pump1 Delta Pressure Transmitter MAX Value** Maximum or high range value of DP transmitter	0.0	2175.0	435.0	Psi	RW	3115
P1L	Pump1 Dis.Prs Sensor MIN Value	**Pump1 Discharge Pressure Sensor MIN Value** Minimum or low range value of discharge pressure sensor	-14.4	72.5	0.0	Psi	RW	3120
P1H	Pump1 Dis.Prs Sensor MAX Value	**Pump1 Discharge Pressure Sensor MAX Value** Maximum or high range value of discharge pressure sensor	72.5	2175.0	435.0	Psi	RW	3121
P1A	Vessel-Pump1 Pressure Sensor Fault Mode	**Vessel (DP) – Pump1 Pressure Sensor Fault Mode** When using multiple pressure sensors choose the mode or action occurs when a pressure sensor error/alarm is active. 0 = Auto OFF (Pump will stay in "AUTO" mode and will be held "OFF" until the sensor is back online and functioning) 1 = Lag Pump (Pump will go to "OFF" mode, de-energize, and Standby/Lag pump will energize "AUTO" "ON")	0	1	Lag Pump		RW	3223
Parameters > Vessel/Pump 2 Prs Cfg								
D12L	Vessel/Pump2 DP Transmitter MIN Value	**Vessel/Pump2 Delta Pressure Transmitter MIN Value** Minimum or low range value of DP transmitter	-14.4	72.5	0	Psi	RW	3116
D2H	Vessel/Pump2 DP Transmitter MAX Value	**Vessel/Pump2 Delta Pressure Transmitter MAX Value** Maximum or high range value of DP transmitter	0.0	2175.0	435.0	Psi	RW	3117
P2L	Pump2 Dis.Prs Sensor MIN Value	**Pump2 Discharge Pressure Sensor MIN Value** Minimum or low range value of discharge pressure sensor	-14.4	2175.0	0.0	Psi	RW	3122
P2H	Pump2 Dis.Prs Sensor MAX Value	**Pump2 Discharge Pressure Sensor MAX Value** Maximum or high range value of discharge pressure sensor	72.5	2175.0	435.0	Psi	RW	3123
P2A	Vessel-Pump2 Pressure Sensor Fault Mode	**Vessel (DP) – Pump2 Pressure Sensor Fault Mode** When using multiple pressure sensors choose the mode or action occurs when a pressure sensor error/alarm is active. 0 = Auto OFF (Pump will stay in "AUTO" mode and will be held "OFF" until the sensor is back online and functioning) 1 = Lag Pump (Pump will go to "OFF" mode, de-energize, and Standby/Lag pump will energize "AUTO" "ON")	0	1	Lag Pump		RW	3224
Parameters > Vessel/Pump 3 Prs Cfg								
D3L	Vessel/Pump3 DP Transmitter MIN Value	**Vessel/Pump3 Delta Pressure Transmitter MIN Value** Minimum or low range value of DP transmitter	-14.4	72.5	0	Psi	RW	3118
D3H	Vessel/Pump3 DP Transmitter MAX Value	**Vessel/Pump3 Delta Pressure Transmitter MAX Value** Maximum or high range value of DP transmitter	0.0	1450.0	435.0	Psi	RW	3119
P3L	Pump3 Dis.Prs Sensor MIN Value	**Pump3 Discharge Pressure Sensor MIN Value** Minimum or low range value of discharge pressure sensor	-14.4	72.5	0.0	Psi	RW	3124
P3H	Pump3 Dis.Prs Sensor MAX Value	**Pump3 Discharge Pressure Sensor MAX Value** Maximum or high range value of discharge pressure sensor	72.5	1450.0	435.0	Psi	RW	3125
P3A	Vessel-Pump3 Pressure Sensor Fault Mode	**Vessel (DP) – Pump3 Pressure Sensor Fault Mode** When using multiple pressure sensors choose the mode or action occurs when a pressure sensor error/alarm is active. 0 = Auto OFF (Pump will stay in "AUTO" mode and will be held "OFF" until the sensor is back online and functioning) 1 = Lag Pump (Pump will go to "OFF" mode, de-energize, and Standby/Lag pump will energize "AUTO" "ON")	0	1	Lag Pump		RW	3225
Parameters > Sensor Filters								
APF	Probe Filter Value	**Level Probe Sensor Filter Value** Measurement samples for averaging Level probe value. 0 = No filter 1 = 2 sample average 2 = 4 sample average 3 = 16 sample average	0	3	2		RW	3077

© Danfoss

Classified as Public

Label ID	Parameter Name	Description and selection options	Min	Max	Factory Setting	Unit	RW RO	Modbus Address
PPF	Pump Pressure Sensor Filter	**Pump Pressure Sensor Filter** Measurement samples for averaging Pump discharge pressure value. 0 = No filter 1 = 2 sample average 2 = 4 sample average 3 = 16 sample average	0	3	1		RW	3078
VPF	Vessel Pressure Sensor Filter	**Vessel Pressure Sensor Filter** Measurement samples for averaging Vessel pressure value. 0 = No filter 1 = 2 sample average 2 = 4 sample average 3 = 16 sample average	0	3	1		RW	3079
ORF	Oil Rectifier SH Temp Sensor Filter	**Oil Rectifier Superheat Temperature Sensor Filter** Measurement samples for averaging Vessel pressure value. 0 = No filter 1 = 2 sample average 2 = 4 sample average 3 = 16 sample average	0	3	3		RW	3149
Parameters > Oil Rectifier Settings								
ORE	Oil Rectifier Main Switch	**Oil Rectifier Main Switch** Enables Oil Rectifier 0 = OFF 1 = ON	0	1	OFF		RW	3147
o30	Superheat Gas Type	**Select the refrigerant gas for the Oil rectifier -** o30 0-R12 1-R22 31-R413a 32-R422d 2-R134a 33-R427a 34-R438a 3-R502 35-R513a 36-R407a 4-R717 37-R1234ze 38-R1234yf 5-R13 39-R488a 40-R449a 6-R131b1 40-R449a 41-R452a 7-R23 8-R500 9-R503 10-R114 11-R142b 12-Invalid 13-R32 14-R227ea 15-R401a 16-R507a 17-R402a 18-R404a 19-R407c 20-R407a 21-R407b 22-R410a 23-R170 24-R290 25-R600 26-R600a 27-R744 28-R1270 29-R417a 30-R422a	0	41	R744		RW	3150
n04	Superheat Proportional Gain Kp	**Superheat Proportional Gain**	0.5	30.00	3.0		RW	3152
n05	Superheat I: Tn Integral Time	**Superheat I: Tn Integral Time**	20	600	120	s	RW	3153
n09	Superheat Maximum Reference	**Superheat Maximum Reference**	2.0	50.0	12.0	K	RW	3164
n10	Superheat Minimum Reference	**Superheat Minimum Reference**	1.0	100.0	7.0	K	RW	3163
n11	Superheat MOP Max Operating Pressure	**Superheat MOP Max Operating Pressure**	0.0	2900.0	290.0	Psi	RW	3151
n15	Superheat Start Time	**Superheat Start Time**	0	90	5	s	RW	3168
n17	Superheat Start Opening Degree	**Superheat Start Opening Degree** Note: This will give a fixed opening degree for the duration of the start time, regardless of the superheat value.	0.0	100.0	10.0	%	RW	3166
n18	Superheat Stability Factor	**Superheat Stability Factor**	0	10	5		RW	3167
n19	Superheat Damping Factor	**Superheat Damping Factor – SH Reference** Damping of amplification around SH Reference value	0.0	1.0	0.3		RW	3161
n20	Superheat Amplification Factor KpT0	**Superheat Amplification Factor KpT0** Amplification factor for superheat	0.0	1.0	0.4		RW	3162
n21	Superheat Control Mode	**Superheat Regulation Mode** 1 = MSS (Minimum stable superheat) 2 = LoadAp (Load Define Application)	1	2	MSS		RW	3159
n22	Superheat Close Reference	**Superheat Close Reference** Min superheat reference for loads < 10%	1.0	30.0	4.0	K	RW	3148
SHR	Superheat Close Reference Offset	**Superheat Close Reference Offset** Offset to add to Superheat close reference	-40.0	140.0	0.0	K	RW	3160
n32	Superheat MAX Valve Opening Degree	**Superheat MAX Valve Opening Degree**	0.0	100.0	100.0	%	RW	3165
Parameters > Advanced App Settings								
SO1	Setpoint 1 Offset Pumps OFF/No Cooling Demand	**Setpoint 1 Offset Pumps OFF/No Cooling Demand** Adds a positive offset value to SP1. Use to effectively increase the liquid level in the vessel above the original setpoint during periods when there is no cooling demand or when the pumps are "OFF". SP1 returns to the original setpoint value when the pump(s) restart. Example: SP1=50 SO1=10%, SP1=55 when pumps "OFF"	0	100	0	%	RW	3108

© Danfoss

Classified as Public

Label ID	Parameter Name	Description and selection options	Min	Max	Factory Setting	Unit	RW RO	Modbus Address
SO2	Setpoint 2 Offset Pumps OFF/No Cooling Demand	**Setpoint 2 Offset Pumps OFF/No Cooling Demand** Adds a positive offset value to SP2. Use to effectively increase the liquid level in the vessel above the original setpoint during periods when there is no cooling demand or when the pumps are "OFF". SP2 returns to the original setpoint value when the pump(s) restart.	0	100	0	%	RW	3109
SO3	Multiple Pump Prs Sensors to AI2 AI3 AI4 (4-20mA)	**Multiple Pump Prs Sensors to AI2 AI3 AI4 (4-20mA)** Move multiple pump discharge pressure sensor inputs from AI7 AI8 and AI9 which are 0-10V inputs to AI2 AI3 and AI4 which are 4-20mA inputs. Pump1,2, and 3 Amp inputs will become non-operational. 0=NO 1=YES In addition, configure Analog Inputs in parameters at: Main Menu>Input/Output>I/O Config>Analog Input Note: Ensure AI7,8 and 9 are configured for no AI Tag or --------	0	1	NO		RW	3193
MSH	Hide Valves on Main Screen	**Hide Valves on Main Screen** Hides the images of solenoid valve 1 (SV1) and solenoid valve 2 (SV2) on the Main Screen. 0 = NO 1 = YES	0	1	NO		RW	3204
FSN	Rename Solenoid Float Switches	**Rename Solenoid Float Switches in Float Status Screen** 0 = NO 1 = YES -Rename "Solenoid Valve 1" -> "MID – HIGH LEVEL" Rename "Solenoid Valve 2" -> "MID – LOW LEVEL"	0	1	NO		RW	3207
Main Menu > Pump Modes								
P1	Pump 1 Setup	**Pump #1 Setup** 0 = Automatic (on/off) 1 = Standby 2 = OFF 3 = Manual (on)	0	3	0 - Auto		RW	3004
P2	Pump 2 Setup	**Pump #2 Setup** 0 = Automatic (on/off) 1 = Standby 2 = OFF 3 = Manual (on)	0	3	1 - SBY		RW	3005
P3	Pump 3 Setup	**Pump #3 Setup** 0 = Automatic (on/off) 1 = Standby 2 = OFF 3 = Manual (on)	0	3	2 - Off		RW	3006
Service > General > Setup								
y01	ON/OFF	**MCX System Controller State** Turns off all Digital and Analog outputs 0 = OFF 1 = ON	0	1	1 - ON		RW	3080
y07	Restore default parameters	**Restore default parameters** 0 = NO 1 = YES	0	1	0 - NO		RW	3081
y05	Measurement Units	**Measurement Units** 0 = Metric 1 = US	0	1	1 - US		RW	3082
Service > General > Alarm Configuration								
AdL	Alarm relay activation delay	**Alarm relay activation delay**	0	999	5		RW	3084
ASD	Alarm Delay Time - Startup	**Alarm delay time at startup of controller** Increase Time Delay to avoid false alarms at startup. Time delay to cycle though a few iterations/loops to read and write all measurement data from sensors to controller	0	100	20	s	RW	3085
ADP	Alarm Delay Time – Probe Startup	**Alarm Delay Time at Startup for Probe Transmitter** Increase Time Delay to avoid false alarms at startup.	0	100	20	s	RW	3195
AHR	Alarm HLSD Reset Type	Alarm High Level Shutdown Reset Type Set the type of reset functionality for HLSD Alarm. **-1 = Automatic reset of alarm** If liquid level goes above parameter SP3 + delay (Alarm set) and then goes below parameter SP3 + delay, the alarm will automatically reset. May use also with HLSD float alarm. **0 = Manual reset of alarm** If pressure goes above parameter SP3 + delay (Alarm set) and then goes below parameter SP3 + delay, the alarm will require a manual reset. May use also with HLSD float alarm.	-1	0	-1		RW	3186
AHS	Alarm Delay Time ON – High Level Shutdown HLSD	**Alarm Delay Time ON – High Level Shutdown HLSD** Sets the delay time before a high level shutdown alarm is issued after liquid level surpasses HLSD setpoint SP3 or when HLSD float alarm is de-energized.	0	360	5	s	RW	3184
AHO	Alarm Delay Time OFF – High Level Shutdown HLSD	**Alarm Delay Time OFF – High Level Shutdown HLSD** Sets the delay time before a high level shutdown alarm is cleared after the liquid level falls blow HLSD setpoint SP3 or when HLSD float alarm is re-energized.	0	360	5	s	RW	3185
AHL	Alarm Delay Time - High Level HLA	**Alarm Delay Time – High Level HLA** Sets the delay time before a high level alarm is issued when the liquid level surpasses HLA setpoint SP4 or when HLA float alarm is de-energized. Delay time is also used to clear alarm after liquid level falls below parameter SP4 SP or when HLA alarm float is re-energized.	0	360	5	s	RW	3183
HLN	High Level - Alarm	**High Level – Alarm** 0 = No Alarm – Output only 1 = Yes Alarm – with Output	0	1	Yes Alarm			3188
ALA	Alarm Delay Time - Low Level LLA	**Alarm Delay Time – Low Level LLA** Sets the delay time before a Low level alarm is issued when the liquid level falls below LLA parameter setpoint SP6 or when LLA float alarm is de-energized. Delay time is also used to clear alarm after liquid level rises above parameter SP6 SP or when LLA alarm float is re-energized.	0	360	5	s	RW	3182

© Danfoss

Classified as Public

Label ID	Parameter Name	Description and selection options	Min	Max	Factory Setting	Unit	RW RO	Modbus Address
LLN	Low Level - Alarm	**Low Level – Alarm** 0 = No Alarm – Output only (see parameter SCA) 1 = Yes Alarm – with Output (see parameter SCA)	0	1	Yes Alarm			3187
ALS	Alarm Delay Time - Low Level Shutdown LLSD	**Alarm Delay Time – Low Level LLSD** Sets the delay time before a Low level shutdown alarm is issued after the liquid level falls below LLSD parameter setpoint SP5 or when LLSD float alarm is de-energized. Delay time is also used to clear alarm after liquid level rises above parameter SP5 SP or when LLSD alarm float is re-energized.	0	360	10	s	RW	3181
SCA	General Alarm Select DO15	**General Alarm Select DO15** Select Alarm or function that activates DO15 0 = General Alarm 1 DI18 1 = General Alarm 2 DI19 2 = General Alarm 3 DI20 3 = Low Level Alarm	0	3	Low Level Alarm		RW	3155
A1A	General Alarm 1 Active State	**General Alarm 1 Active State** 0 = Energized 1 = De-energized	0	1	Energized		RW	3170
A1D	General Alarm 1 Time Delay	**General Alarm 1 Time Delay**	0	120	5	s	RW	3156
A2A	General Alarm 2 Active State	**General Alarm 2 Active State** 0 = Energized 1 = De-energized	0	1	Energized		RW	3171
A2D	General Alarm 2 Time Delay	**General Alarm 2 Time Delay**	0	120	5	s	RW	3157
A3A	General Alarm 3 Active State	**General Alarm 3 Active State** 0 = Energized 1 = De-energized	0	1	Energized		RW	3172
A3D	General Alarm 3 Time Delay	**General Alarm 3 Time Delay**	0	120	5	s	RW	3158
AOF	Alarm relay active if unit in OFF	**Alarm Relay active if unit is OFF** 0 = NO 1 = YES	0	1	1 - YES		RW	3086
BUZ	Buzzer activation time	**Buzzer activation time** Buzzer on time if an alarm occurs 0 = OFF 1-14 = Minutes ON 15 = Always ON	0	15	0	Min	RW	3083
APP	Alarm Delay Time – Multi Pump Pressure Sensors	**Alarm Delay time – Employing Multiple Pump Pressure Sensors.** Time delay before a pump pressure sensor alarm becomes active.	0	360	5	s	RW	3226
Service > General > Serial settings								
SEr	Serial address (Modbus and CAN)	**Serial Modbus address of MCX Controller**	1	120	1		RW	3087
bAU	Serial baud rate (Modbus)	**Serial Modbus baud rate (bps)** 0 = 0 1 = 1200 2 = 2400 3 = 4800 4 = 9600 5 = 14400 6 = 19200 7 = 28800 8 = 38400	0	8	6 - 192		RW	3088
COM	Serial settings (Modbus)	**Serial Modbus Protocol setting** 0 = 8N1 (8bits, no parity, 1 stop bit) 1 = 8E1 (8bits, even parity, 1 stop bit) 2 = 8N2 (8bits, no parity, 2 stop bits)	0	2	0 - 8N1		RW	3089
Service > General > Password		***(login password level 3 to view)***						
L01	Password level 1	**Password for level one parameter access**	0	999	100		RW	3090
L02	Password level 2	**Password for level two parameter access**	0	999	200		RW	3091
L03	Password level 3	**Password for level three parameter access**	0	999	300		RW	3092
Service > Backup/Restore Parameters								
Cmd	Backup Parameters							
Cmd	Restore Parameters							
Service > RTC Setup								
Service > Data Logging > Log Data USB Drive								
NDR	Max Number of Records	**Max Number of Records**	0	10000	1000		RW	3093
DST	Data Sample Time (sec)	**Data Sample Time (sec)** Interval in seconds that data is logged	0	10000	30	s	RW	3094
Service > Pump RT Equalization								
PRE	Enable Pump Runtime Equalization	**Enable Pump Runtime Equalization** 0 = Disable 1 = Enable	0	1	Disable		RW	3137
POL	Use Period or Lifetime Hrs for Equalization	**Use Period or Lifetime Hrs for Equalization** 0 = Period 1 = Lifetime	0	1	Period		RW	3141
WDY	Weekday	**Weekday** 0 = Monday 1 = Tuesday 2 = Wednesday 3 = Thursday 4 = Friday 5 = Saturday 6 = Sunday	0	6	Sunday		RW	3138

© Danfoss

Classified as Public

Label ID	Parameter Name	Description and selection options	Min	Max	Factory Setting	Unit	RW RO	Modbus Address
HR	Hour	**Hour - Military Time – 24 hr. clock** 0 = 12am 0:00 Minimum 1 = 1am etc.. 11 = 11am 12 = 12pm 13 = 1pm etc.. 23 = 11pm 24 = 12am 24:00 Maximum	0	24	3	h	RW	3139
MIN	Minute	**Minute** 0-59	0	59	0	min	RW	3140
Service > Reset PeriodRun Hrs [Reset Pump Period Run Hours] (login password level 2 to view)								
Cmd	RS PeriodRunHrs Pump1	When in level 2, this command will appear. Command will reset the runtime hours of the pump. To Reset, highlight command and press the return or enter key**.**						
Cmd	RS PeriodRunHrs Pump2	**Same as above.**						
Cmd	RS PeriodRunHrs Pump3	**Same as above.**						
Service > Reset LifetimeRun Hrs [Reset Pump Lifetime Run Hours] (login password level 3 to view)								
Cmd	RS LifeRunHrs Pump1	When in level 3, this command will appear. Command will reset the runtime hours of the pump. To Reset, highlight command and press the return or enter key**.**						
Cmd	RS LifeRunHrs Pump2	**Same as above.**						
Cmd	RS LifeRunHrs Pump3	**Same as above.**						
Service > Reset Pump Start-Stop Cycle count								
Service > Testing of I/O								
TEN	Test Mode Enable	**Test Mode Enable** 0 = NO 1 = YES	0	1	0		RW	3198
AO1	Test AO1	**Test AO1** Enter from keypad or Write MB value between 0.00 and 10.00	0.00	10.00	0.00	V	RW	3197
AO2	Test AO2	**Test AO2**	0.00	10.00	0.00	V	RW	3199
AO3	Test AO3	**Test AO3**	0.00	10.00	0.00	V	RW	3200
AO4	Test AO4	**Test AO4**	0.00	10.00	0.00	V	RW	3201
AO5	Test AO5	**Test AO5**	0.00	10.00	0.00	V	RW	3202
AO6	Test AO6	**Test AO6**	0.00	10.00	0.00	V	RW	3203
DO1	Test DO1	**Test DO1** Enter from keypad or Write MB value: 0 = De-energize relay 1 = Energize relay	0	1	0		RW	3208
DO2	Test DO2	**Test DO2**	0	1	0		RW	3209
DO3	Test DO3	**Test DO3**	0	1	0		RW	3210
DO4	Test DO4	**Test DO4**	0	1	0		RW	3211
DO5	Test DO5	**Test DO5**	0	1	0		RW	3212
DO6	Test DO6	**Test DO6**	0	1	0		RW	3213
DO7	Test DO7	**Test DO7**	0	1	0		RW	3214
DO8	Test DO8	**Test DO8**	0	1	0		RW	3215
DO9	Test DO9	**Test DO9**	0	1	0		RW	3216
D10	Test DO10	**Test DO10**	0	1	0		RW	3217
D11	Test DO11	**Test DO11**	0	1	0		RW	3218
D12	Test DO12	**Test DO12**	0	1	0		RW	3219
D13	Test DO13	**Test DO13**	0	1	0		RW	3220
D14	Test DO14	**Test DO14**	0	1	0		RW	3221
D15	Test DO15	**Test DO15**	0	1	0		RW	3222
Other Status variables - Modbus Registers>								
C01	Reset Alarms	**Reset Alarms** 0 = no reset 1 = no reset 2 = Reset	0	2	0		RW	1859
V06	Liquid Level	**Liquid Level in Vessel** Employing an analog level probe (LP)	0	100.0		%	RO	8106
V10	Any Alarm Active	**Any Alarm Active** 0 = No 1 = Yes	0	1			RO	8115
V11	High Level Shutdown Alarm Active	**High Level Shutdown Alarm Active** 0 = No 1 = Yes	0	1			RO	8116
V12	High Level Alarm Active	**High Level Alarm Active** 0 = No 1 = Yes	0	1			RO	8117
V13	Low Level Alarm Active	**Low Level Alarm Active** 0 = No 1 = Yes	0	1			RO	8118
V14	Low Level Shutdown Alarm Active	**Low Level Shutdown Alarm Active** 0 = No 1 = Yes	0	1			RO	8119
V19	Transfer Solenoid Active counts	**Active Transfer Solenoid Counter**					RO	8207
V20	Transfer Solenoid Time Remaining in count period	**Transfer Solenoid Time Remaining in count period**					RO	8211
V22	Motor-Pump #1 Amps	**Motor-Pump #1 Amps**	0	350.0		A	RO	8125
V23	Motor-Pump #2 Amps	**Motor-Pump #2 Amps**	0	350.0		A	RO	8127

© Danfoss

Classified as Public

V24	Motor-Pump #3 Amps	**Motor-Pump #3 Amps**	0	350.0		A	RO	8129
V30	Vessel Pressure BAR	**Vessel Pressure - BAR**	-4	80		BAR	RO	8136
V31	Vessel Pressure PSI	**Vessel Pressure - PSI**	0	1160		PSI	RO	8137
V32	Pump Discharge Pressure BAR	**Pump Discharge Pressure – BAR**	-4	80		BAR	RO	8139
V33	Pump Discharge Pressure PSI	**Pump Discharge Pressure – PSI**	0	1160		PSI	RO	8140
V34	Differential Pressure	**Differential Pressure Pump-Vessel** Differential pressure between the Pump and Vessel	0	500		PSI	RO	8142
V140	High Differential Pressure	**High Differential Pressure** High pressure between Vessel and Pump: 0=NO; 1=YES	0	1			RO	8254
V154	Pump1 Period Runtime Hours	**Pump1 Period Runtime Hours** Total runtime hours in the current period for pump 1	0	99999		Hrs	RO	8274
V155	Pump1 Life Runtime Hours	**Pump1 Life Runtime Hours** Total Life time run hours for pump 1	0	999999		Hrs	RO	8276
V159	Pump3 Period Runtime Hours	**Pump3 Period Runtime Hours** Total runtime hours in the current period for pump 3	0	99999		Hrs	RO	8284
V160	Pump3 Life Runtime Hours	**Pump3 Life Runtime Hours** Total Life time run hours for pump 3	0	999999		Hrs	RO	8286
V161	Pump2 Life Runtime Hours	**Pump2 Life Runtime Hours** Total Life time run hours for pump 2	0	999999		Hrs	RO	8288
V162	Pump2 Period Runtime Hours	**Pump2 Period Runtime Hours** Total runtime hours in the current period for pump 2	0	99999		Hrs	RO	8290
V167	Transfer SV Float De-energized	**Transfer SV Float Input DI8 De-energized** 0 = No 1 = Yes	0	1			RO	8313
V171	Reset Data Log to USB Drive	**Reset Data Log** 0 = No 1 = Yes	0	1			RW	9907
Alarms>								
A01	General alarm	**General alarm – Auto-resetting** 0 = Inactive 1 = Active	0	1			RO	1901 .08
A03	Pump1 Aux Fault	**Pump1 Aux Fault – Manual reset**	0	1			RO	1901 .09
A05	Pump2 Aux Fault	**Pump2 Aux Fault – Manual**	0	1			RO	1901 .10
A07	Pump3 Aux Fault	**Pump3 Aux Fault - Manual**	0	1			RO	1901 .11
A08	Level Sensor Fault	**Level Sensor Fault - Auto**	0	1			RO	1901 .12
A09	Vessel Pressure Sensor Fault	**Vessel Pressure Sensor Fault - Auto**	0	1			RO	1901 .13
A10	Pump Pressure Sensor Fault	**Pump Pressure Sensor Fault - Auto**	0	1			RO	1901 .14
A11	High Level Shutdown Fault	**High Level Shutdown Fault - Manual**	0	1			RO	1901 .15
A12	High Level Alarm	**High Level Alarm - Auto**	0	1			RO	1901 .00
A13	Low Level Shutdown Alarm	**Low Level Shutdown Alarm - Auto**	0	1			RO	1901 .01
A14	Low Level Alarm	**Low Level Alarm - Auto**	0	1			RO	1901 .02
A15	High Amp Fault Motor 1	**High Amp Fault Motor 1 - Manual**	0	1			RO	1901 .03
A16	High Amp Alarm Motor 1	**High Amp Alarm Motor 1 - Auto**	0	1			RO	1901 .04
A17	Low Amp Fault Motor 1	**Low Amp Fault Motor 1 - Manual**	0	1			RO	1901 .05
A18	Low Amp Alarm Motor 1	**Low Amp Alarm Motor 1 - Auto**	0	1			RO	1901 .06
A19	High Amp Fault Motor 2	**High Amp Fault Motor 2 - Manual**	0	1			RO	1901 .07
A20	High Amp Alarm Motor 2	**High Amp Alarm Motor 2 - Auto**	0	1			RO	1902 .08
A21	Low Amp Fault Motor 2	**Low Amp Fault Motor 2 - Manual**	0	1			RO	1902 .09
A22	Low Amp Alarm Motor 2	**Low Amp Alarm Motor 2 - Auto**	0	1			RO	1902 .10
A23	High Amp Fault Motor 3	**High Amp Fault Motor 3 - Manual**	0	1			RO	1902 .11
A24	High Amp Alarm Motor 3	**High Amp Alarm Motor 3 - Auto**	0	1			RO	1902 .12
A25	Low Amp Fault Motor 3	**Low Amp Fault Motor 3 - Manual**	0	1			RO	1902 .13
A26	Low Amp Alarm Motor 3	**Low Amp Alarm Motor 3 - Auto**	0	1			RO	1902 .14
A27	Cavitation Pump(s) OFF Fault	**Cavitation Pump(s) OFF Fault - Manual**	0	1			RO	1902 .15
A28	Cavitation ON alarm	**Cavitation ON alarm - Auto**	0	1			RO	1902 .00
A29	Cavitation Pump 1 Fault	**Cavitation Pump 1 Fault - Manual**	0	1			RO	1902 .01
A30	Cavitation Pump 2 Fault	**Cavitation Pump 2 Fault - Manual**	0	1			RO	1902 .02
A31	Cavitation Pump 3 Fault	**Cavitation Pump 3 Fault - Manual**	0	1			RO	1902 .03
A32	High Differential Pressure Alarm	**High Differential Pressure Alarm - Programmable** **Configurable in menu Pump Control > Parameter "HPA"**	0	1			RO	1902.04
A33	ICAD MV1 Alarm	**ICAD MV1 Alarm - Auto**	0	1			RO	1902.05

© Danfoss

Classified as Public

A34	ICAD MV2 Alarm	**ICAD MV2 Alarm - Auto**	0	1			RO	1902.06
A35	Diff.Prs Transmitter 1 Fault	**Differential Pressure Transmitter 1 Fault**	0	1			RO	1901.14
A36	Diff.Prs Transmitter 2 Fault	**Differential Pressure Transmitter 2 Fault**	0	1			RO	1901.15
A37	Diff.Prs Transmitter 3 Fault	**Differential Pressure Transmitter 3 Fault**	0	1			RO	1901.00
A38	Pump1 Dis.Prs Sensor Fault	**Pump1 Dis.Prs Sensor Fault**	0	1			RO	1901.01
A39	Pump2 Dis.Prs Sensor Fault	**Pump2 Dis.Prs Sensor Fault**	0	1			RO	1901.05
A40	Pump3 Dis.Prs Sensor Fault	**Pump3 Dis.Prs Sensor Fault**	0	1			RO	1901.06
A41	Pump1 High Diff.Prs Alarm	**Pump1 High Diff.Prs Alarm**	0	1			RO	1901.02
A42	Pump2 High Diff.Prs Alarm	**Pump2 High Diff.Prs Alarm**	0	1			RO	1901.03
A43	Pump3 High Diff.Prs Alarm	**Pump3 High Diff.Prs Alarm**	0	1			RO	1901.04
A44	Pump1 Cavitation Fault DP	**Pump1 Cavitation Fault DP**	0	1			RO	1903.00
A45	Pump2 Cavitation Fault DP	**Pump2 Cavitation Fault DP**	0	1			RO	1903.01
A46	Pump3 Cavitation Fault DP	**Pump3 Cavitation Fault DP**	0	1			RO	1903.02
A47	Vessel High Prs. Alarm	**Vessel High Prs. Alarm**	0	1			RO	1903.3
A48	Oil Rectifier Superheat RTD Fault	**Oil Rectifier Superheat RTD Fault**	0	1			RO	1903.4
A49	General Alarm 1	**General Alarm 1**	0	1			RO	1903.5
A50	General Alarm 2	**General Alarm 2**	0	1			RO	1903.6
A51	General Alarm 3	**General Alarm 3**	0	1			RO	1903.7
A52	Stepper Valve Driver Alarm	**Stepper Valve Driver Alarm**	0	1			RO	1904.8

© Danfoss
Classified as Public

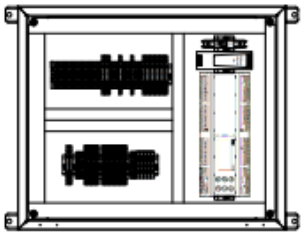

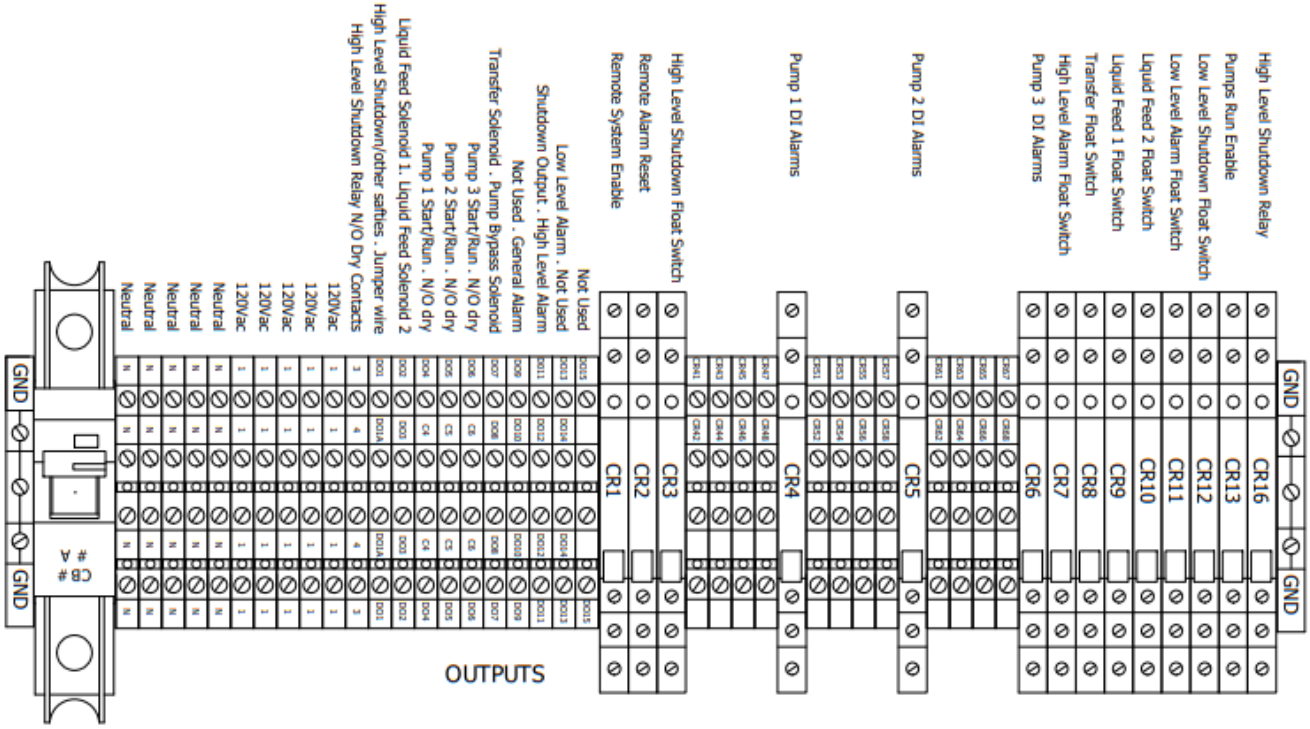

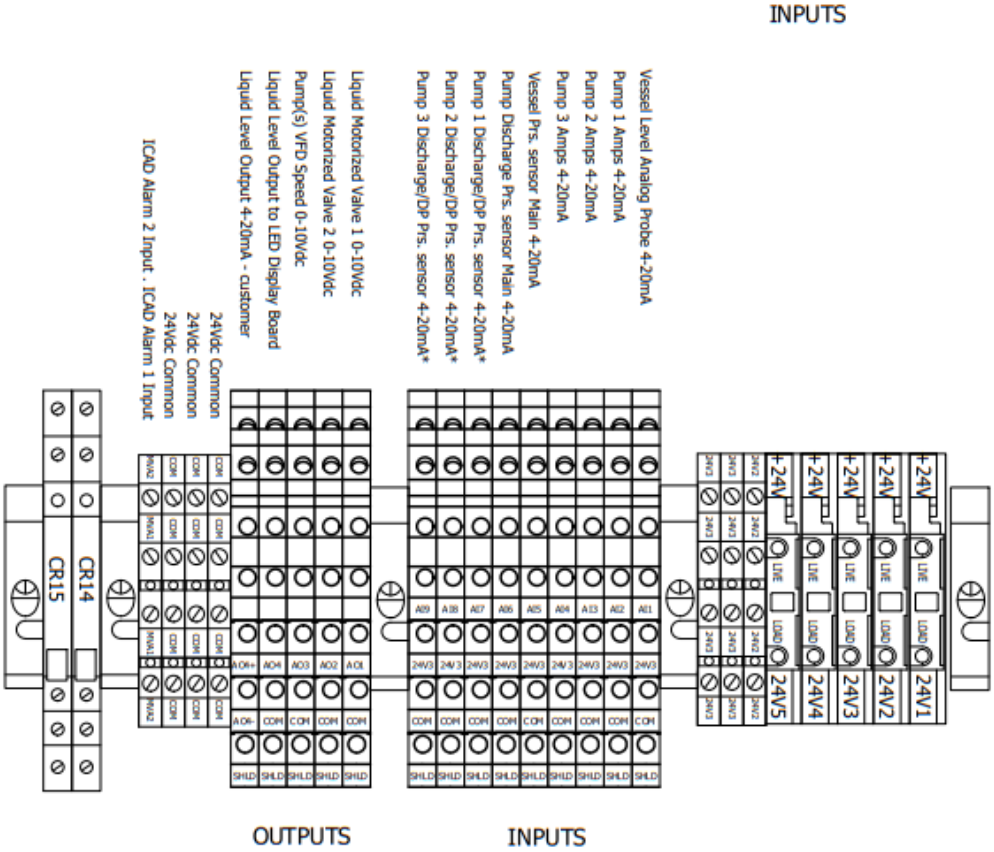

- For Reference ONLY-

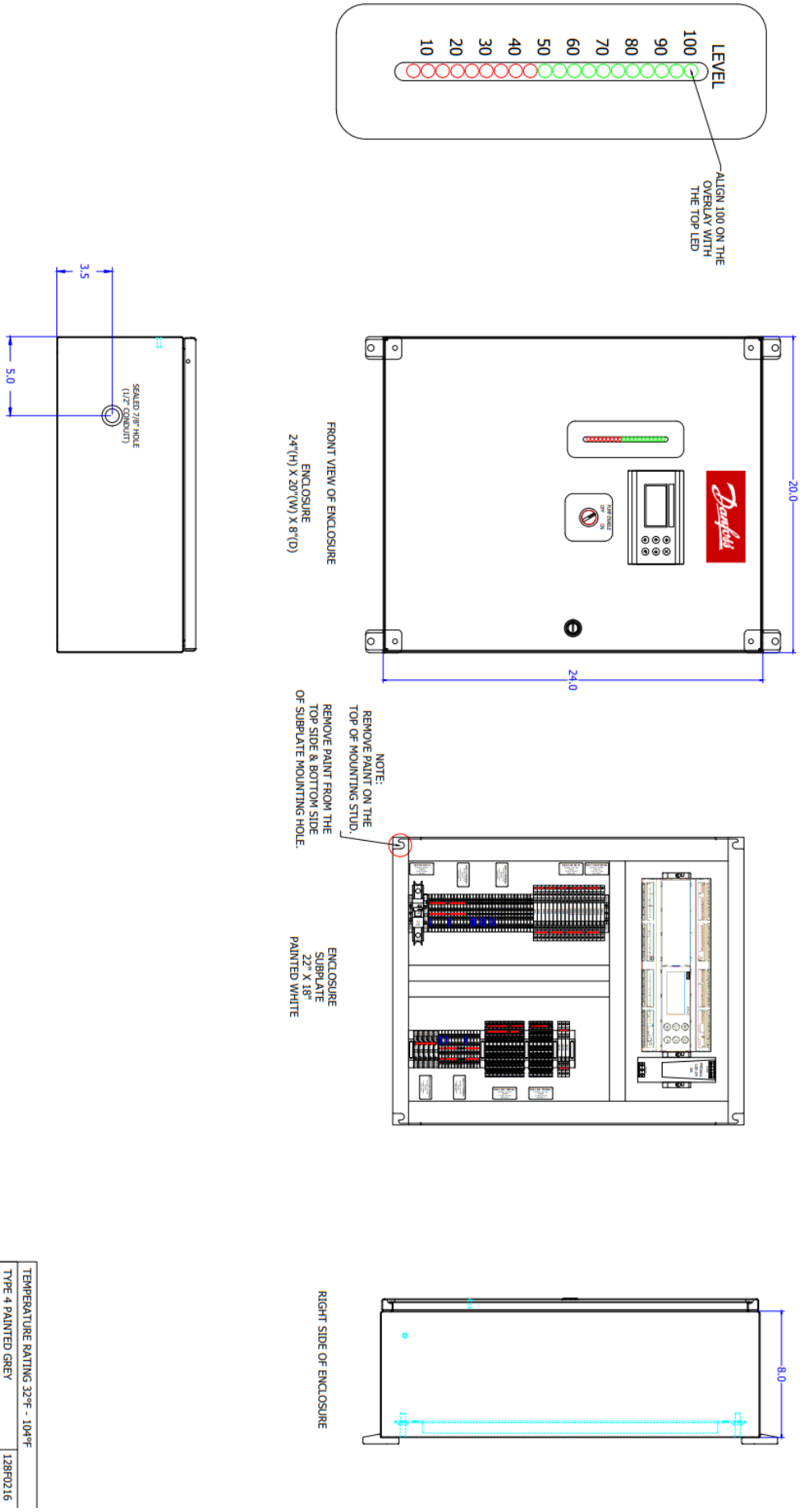
FOR REFERENCE ONLY
LEVEL
100
90
80
70
60
50
40
30
20
10
ALIGN 100 ON THE OVERLAY WITH THE TOP LED
20.0
24.0
FRONT VIEW OF ENCLOSURE
ENCLOSURE
24"(H) X 20"(W) X 8"(D)
3.5
5.0
SEALED 7/8" HOLE (1/2" CONDUIT)
NOTE:
REMOVE PAINT ON THE TOP OF MOUNTING STUD.
REMOVE PAINT FROM THE TOP SIDE & BOTTOM SIDE OF SUBPLATE MOUNTING HOLE.
ENCLOSURE
SUBPLATE
22" X 18"
PAINTED WHITE
8.0
RIGHT SIDE OF ENCLOSURE
TEMPERATURE RATING 32°F - 104°F
TYPE 4 PAINTED GREY
128F0216
TYPE 4X STAINLESS STEEL
-

FOR REFERENCE ONLY

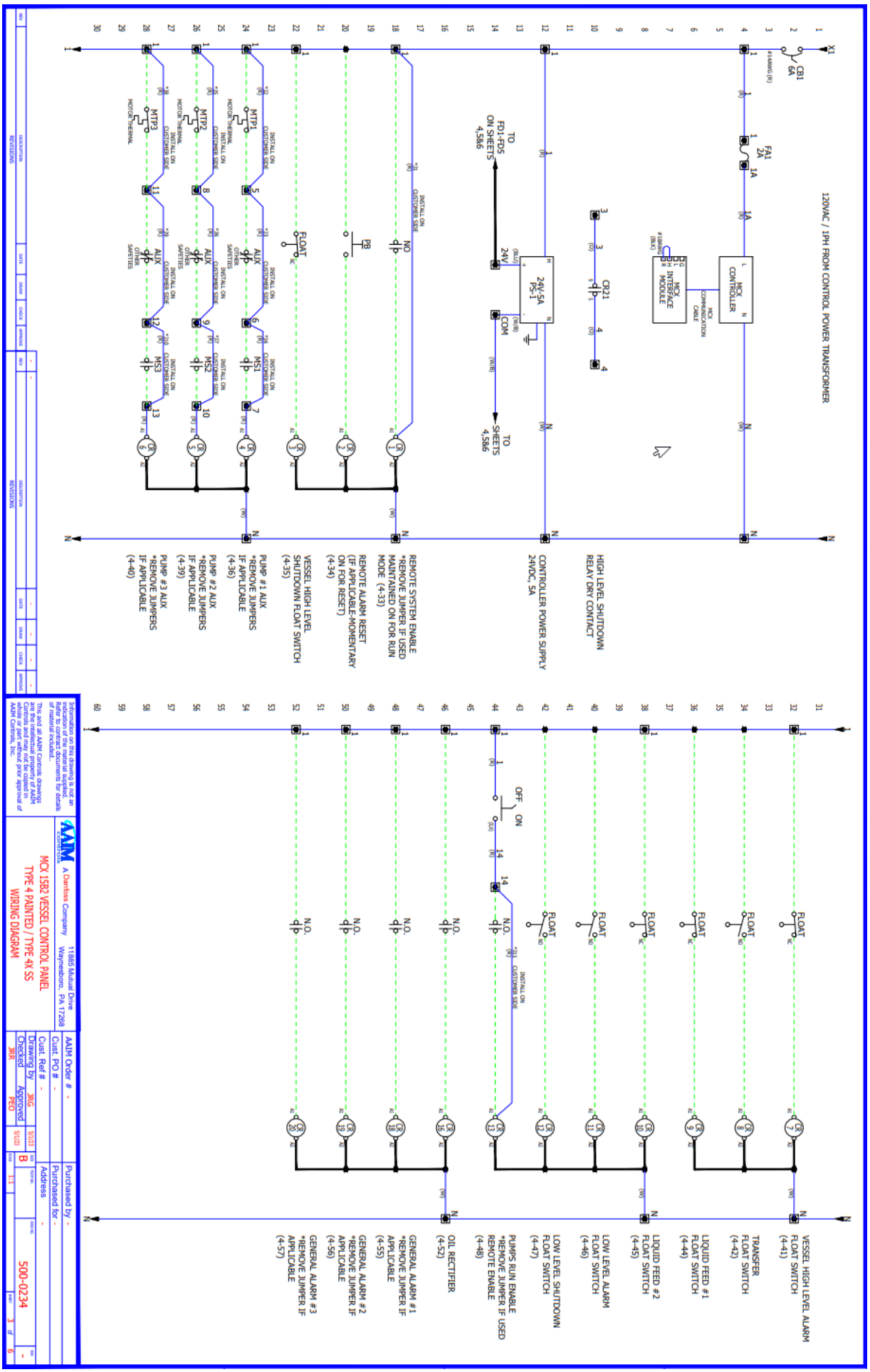

FOR REFERENCE ONLY

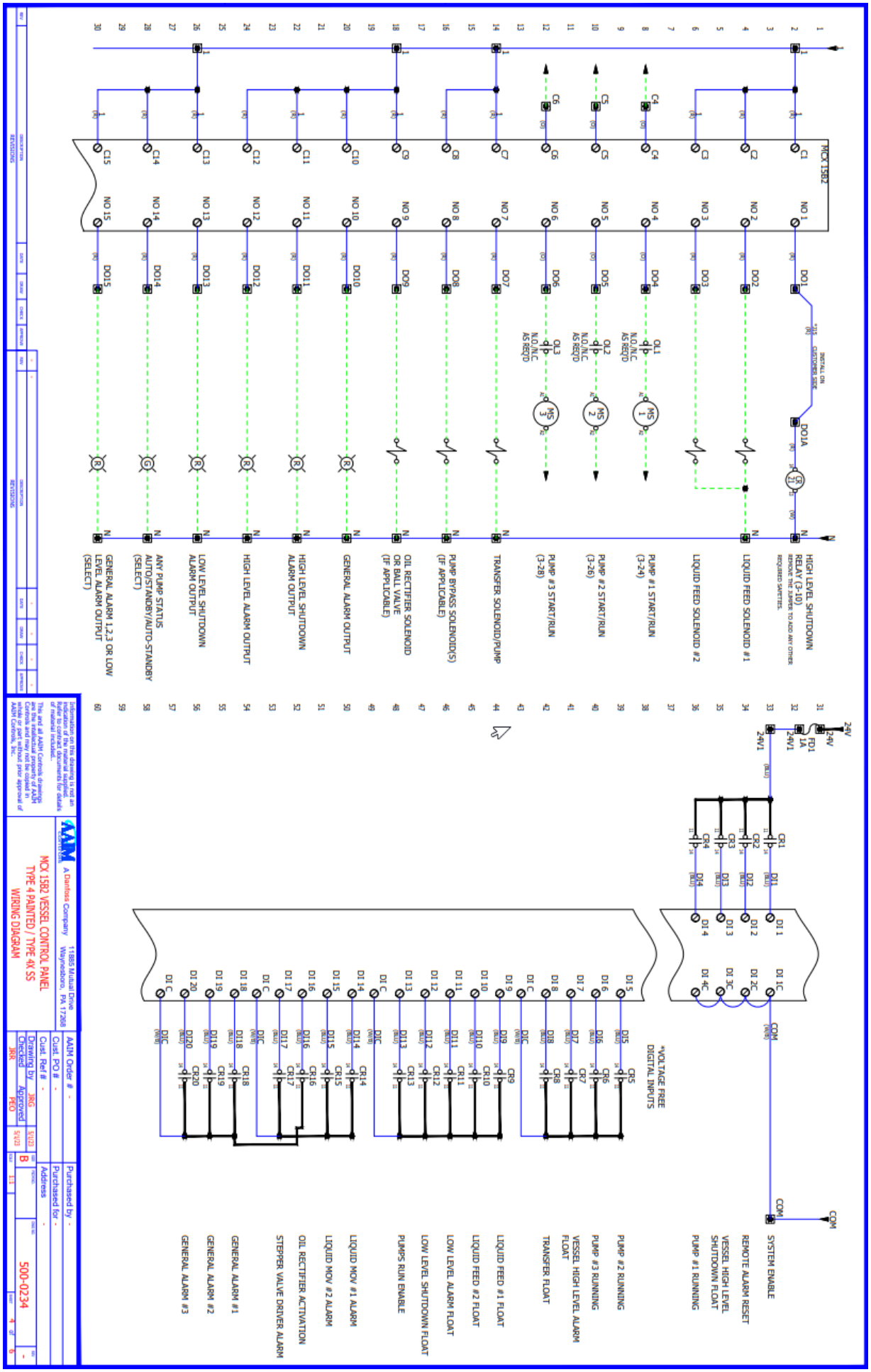

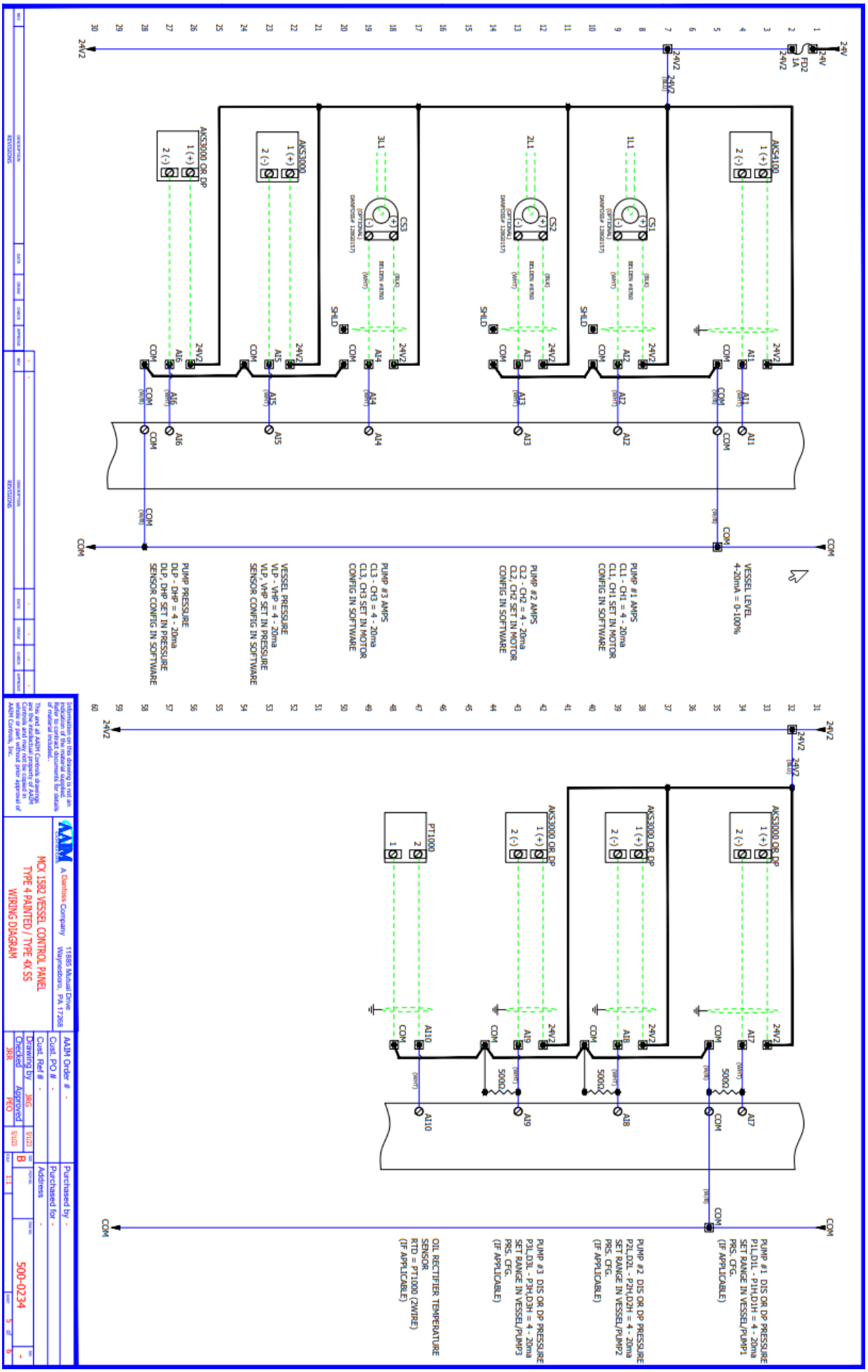

FOR REFERENCE ONLY

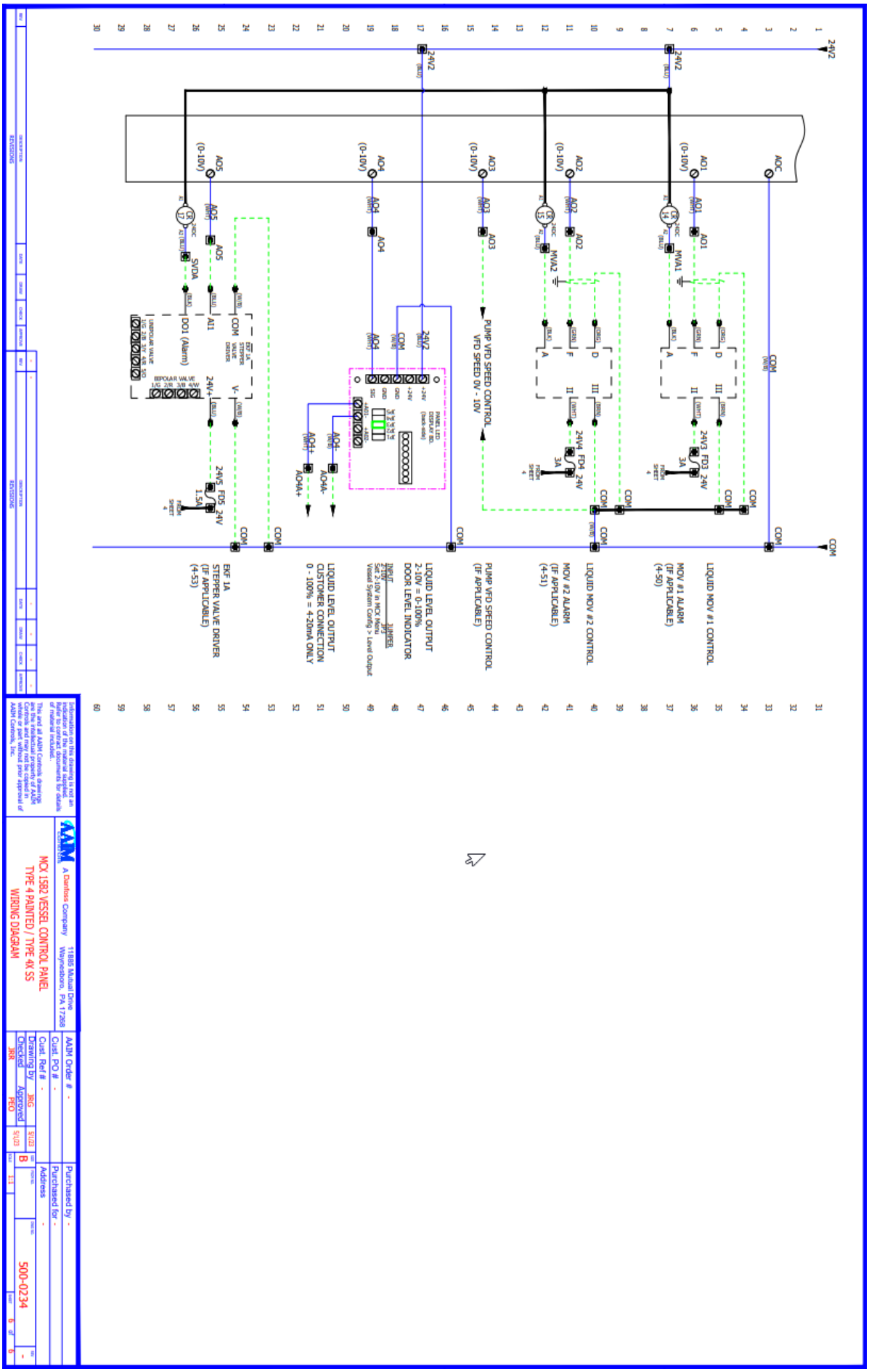

FOR REFERENCE ONLY

Danfoss can accept no responsibility for possible errors in catalogues, brochures and other printed material. Danfoss reserves the right to alter its products without notice. This also applies to products already on order provided that such alterations can be made without subsequential changes being necessary in specifications already agreed.
All trademarks in this material are property of the respective companies. Danfoss and the Danfoss logotype are trademarks of Danfoss A/S. All rights reserved.